SONY

3-275-583-**12** (1)

Video Projector

Operating Instructions

BRAVIA

SXRD
Silicon X-tal Reflective Display

HDMI™
HIGH-DEFINITION MULTIMEDIA INTERFACE

VPL-VW200

© 2007 Sony Corporation

WARNING

To reduce the risk of fire or electric shock, do not expose this apparatus to rain or moisture.

To avoid electrical shock, do not open the cabinet. Refer servicing to qualified personnel only.

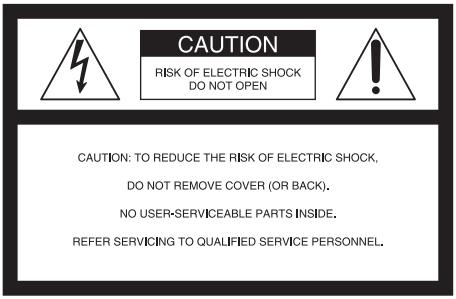

This symbol is intended to alert the user to the presence of uninsulated “dangerous voltage” within the product’s enclosure that may be of sufficient magnitude to constitute a risk of electric shock to persons.

This symbol is intended to alert the user to the presence of important operating and maintenance (servicing) instructions in the literature accompanying the appliance.

For customers in the USA

If you have any questions about this product, you may call:
Sony Customer Information Service Center
1-800-222-7669 or http://www.sony.com/
The number below is for FCC related matters only.

Declaration of Conformity

Trade Name: SONY
Model No.: VPL-VW200
Responsible Party: Sony Electronics Inc.
Address: 16530 Via Esprillo, San Diego, CA 92127 U.S.A.
Telephone Number: 858-942-2230

This device complies with Part 15 of the FCC Rules. Operation is subject to the following two conditions: (1) This device may not cause harmful interference, and (2) this device must accept any interference received, including interference that may cause undesired operation.

This equipment has been tested and found to comply with the limits for a Class B digital device, pursuant to Part 15 of the FCC Rules. These limits are designed to provide reasonable protection against harmful interference in a residential installation. This equipment generates, uses, and can radiate radio frequency energy and, if not installed and used in accordance with the instructions, may cause harmful interference to radio communications. However, there is no guarantee that interference will not occur in a particular installation. If this equipment does cause harmful interference to radio or television reception, which can be determined by turning the equipment off and on, the user is encouraged to try to correct the interference by one or more of the following measures:

- Reorient or relocate the receiving antenna.
- Increase the separation between the equipment and receiver.
- Connect the equipment into an outlet on a circuit different from that to which the receiver is connected.
- Consult the dealer or an experienced radio/TV technician for help.

You are cautioned that any changes or modifications not expressly approved in this manual could void your authority to operate this equipment.

Disposal of Used Lamp

This projector's lamp should be disposed of properly. Consult your local authorities regarding safe disposal.
The material contained in this lamp are similar to those of a fluorescent lamp, so you should dispose of it in the same way.

For customers in Europe

The manufacturer of this product is Sony Corporation, 1-7-1 Konan Minato-ku Tokyo, 108-0075 Japan. The Authorized Representative for EMC and product safety is Sony Deutschland GmbH, Hedelfinger Strasse 61, 70327 Stuttgart, Germany. For any service or guarantee matters please refer to the addresses given in separate service or guarantee documents.

Trademark Information

SXRD, "BRAVIA" and BRAVIA , Motionflow, "x.v.Color" are trademarks of Sony Corporation.

HDMI, the HDMI logo and High-Definition Multimedia Interface are trademarks or registered trademarks of HDMI Licensing LLC.

"Blu-ray Disc" is a trademark.

For customers in Canada

This Class B digital apparatus complies with Canadian ICES-003.

For customers in Europe

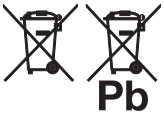

Disposal of waste batteries (applicable in the European Union and other European countries with separate collection systems)

This symbol on the battery or on the packaging indicates that the battery provided with this product shall not be treated as household waste.
By ensuring these batteries are disposed of correctly, you will help prevent potentially negative consequences for the environment and human health which could otherwise be caused by inappropriate waste handling of the battery. The recycling of the materials will help to conserve natural resources.
In case of products that for safety, performance or data integrity reasons require a permanent connection with an incorporated battery, this battery should be replaced by qualified service staff only.
To ensure that the battery will be treated properly, hand over the product at end-of-life to the applicable collection point for the recycling of electrical and electronic equipment.
For all other batteries, please view the section on how to remove the battery from the product safely. Hand the battery over to the applicable collection point for the recycling of waste batteries.
For more detailed information about recycling of this product or battery, please contact your local Civic Office, your household waste disposal service or the shop where you purchased the product.

The socket-outlet should be installed near the equipment and be easily accessible.

CAUTION

RISK OF EXPLOSION IF BATTERY IS REPLACED BY AN INCORRECT TYPE.
DISPOSED OF USED BATTERIES ACCORDING TO THE LOCAL RULES.

Disposal of Old Electrical & Electronic Equipment (Applicable in the European Union and other European countries with separate collection systems)

This symbol on the product or on its packaging indicates that this product shall not be treated as household waste. Instead it shall be handed over to the applicable collection point for the recycling of electrical and electronic equipment. By ensuring this product is disposed of correctly, you will help prevent potential negative consequences for the environment and human health, which could otherwise be caused by inappropriate waste handling of this product. The recycling of materials will help to conserve natural resources. For more detailed information about recycling of this product, please contact your local Civic Office, your household waste disposal service or the shop where you purchased the product.

For customers in Taiwan only

廢電池請回收
僅適用於台灣

Table of Contents

Precautions 7

Location of Controls

Front/Right Side 8
Rear/Bottom 9
Remote Control 10

Connections and Preparations

Unpacking 11
Step 1: Installing the Projector 12
- Before Setting Up the Projector 12
- Connecting the AC Power Cord 14
- Positioning the Projector and a screen 15

Step 2: Connecting the Projector 18
- Connecting to a VCR 18
- Connecting to a Computer 21

Step 3: Adjusting the Picture Position 22
Step 4: Selecting the Menu Language 26

Projecting

Projecting the Picture on the Screen 28
- Turning Off the Power 29

Selecting the Wide Screen Mode 30
Selecting the Picture Viewing Mode 32
Adjusting the Picture Quality 33
- Selecting to directly adjust the desired menu item 33
- Selecting desired adjust menu items in the order 34

Adjusting the Picture Using Real Color Processing 35
Using the Supplied Software to Adjust the Picture Quality (ImageDirector3) 36

Using the Menus

Operation through the Menus 37
Picture Menu 41
Advanced Picture Menu 45
Screen Menu 46
Setup Menu 48
Function Menu 50
Installation Menu 52
Information Menu 55
- About the Preset Memory No. ... 55

Operating the Projector from a Computer

Accessing the Projector from a Computer 56
Checking the Status of the Projector 56
Operating the Projector 57
Setting the Information 57

Others

About the HDMI Control 59

About the x.v.Color 59

Troubleshooting 60

Warning Indicators 62

Message Lists 63

Replacing the Lamp and the Air Filter and cleaning the Ventilation holes (intake) 65

Cleaning the Air Filter 70

Cleaning and the Screen of the Projector 70

Specifications 71

Preset Signals 73

Input Signals and Adjustable/ Setting Items 76

Ceiling Installation 78

When Using the PSS-H10 Projector Suspension Support 78

Making Fine Adjustments to the Horizontal Picture Position 82

Index 85

Precautions

On safety

- Check that the operating voltage of your unit is identical with the voltage of your local power supply.
- Should any liquid or solid object fall into the cabinet, unplug the unit and have it checked by qualified personnel before operating it further.
- Unplug the unit from the wall outlet if it is not to be used for several days.
- To disconnect the cord, pull it out by the plug. Never pull the cord itself.
- The wall outlet should be near the unit and easily accessible.
- The unit is not disconnected to the AC power source (mains) as long as it is connected to the wall outlet, even if the unit itself has been turned off.
- Do not look into the lens while the lamp is on.
- Do not place your hand or objects near the ventilation holes. The air coming out is hot.

On preventing internal heat build-up

After you turn off the power with the I/⏻ (ON/STANDBY) switch, do not disconnect the unit from the wall outlet while the cooling fan is still running.

Caution

The projector is equipped with ventilation holes (intake) and ventilation holes (exhaust). Do not block or place anything near these holes, or internal heat build-up may occur, causing picture degradation or damage to the projector.

On repacking

Save the original shipping carton and packing material; they will come in handy if you ever have to ship your unit. For maximum protection, repack your unit as it was originally packed at the factory.

Location of Controls

Front/Right Side

You can use the buttons on the control panel with the same names as those on the remote control to operate the projector.

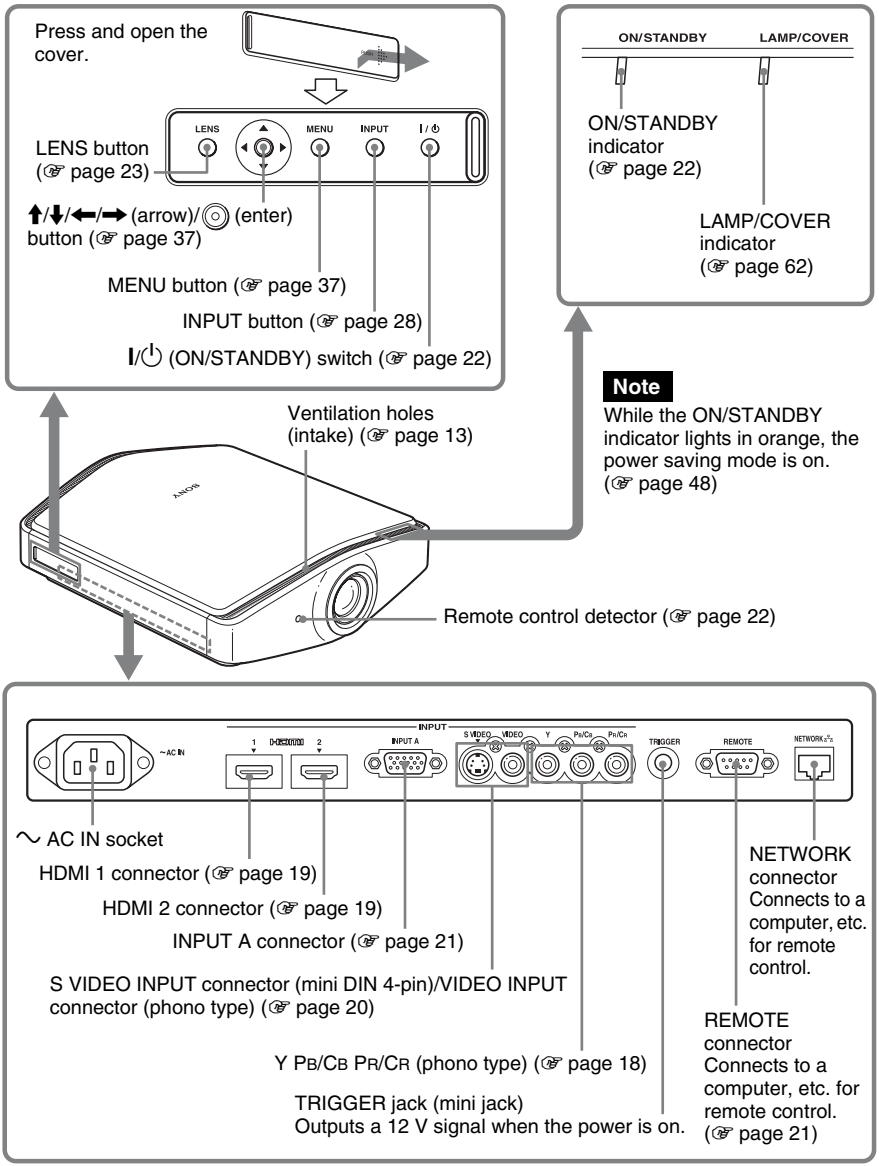

Rear/Bottom

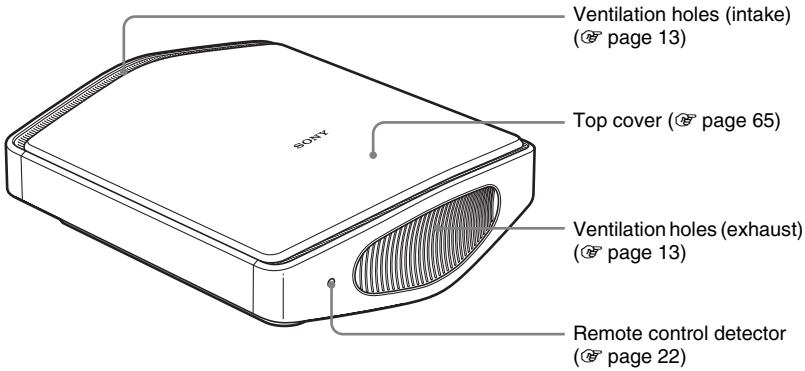
Ventilation holes (intake)
(☞ page 13)
Top cover (☞ page 65)
Ventilation holes (exhaust)
(☞ page 13)
Remote control detector
(☞ page 22)
SONY

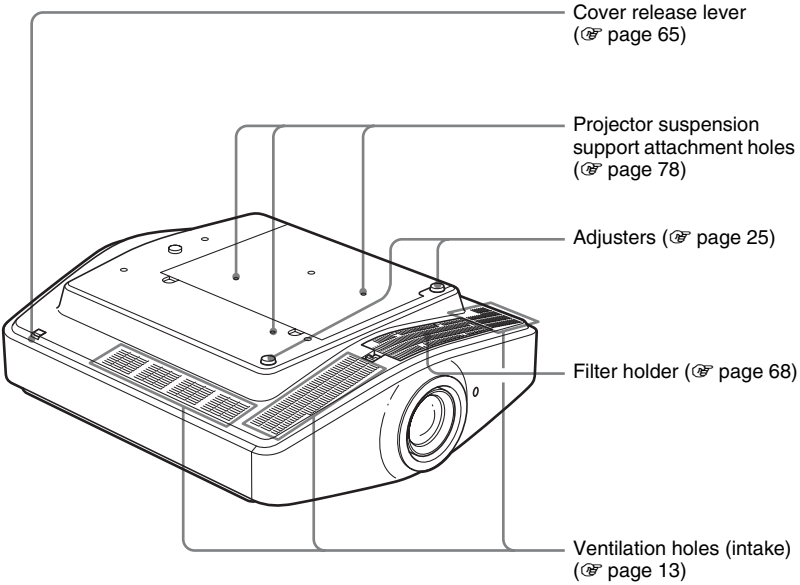
Cover release lever
(☞ page 65)
Projector suspension
support attachment holes
(☞ page 78)
Adjusters (☞ page 25)
Filter holder (☞ page 68)
Ventilation holes (intake)
(☞ page 13)

Remote Control

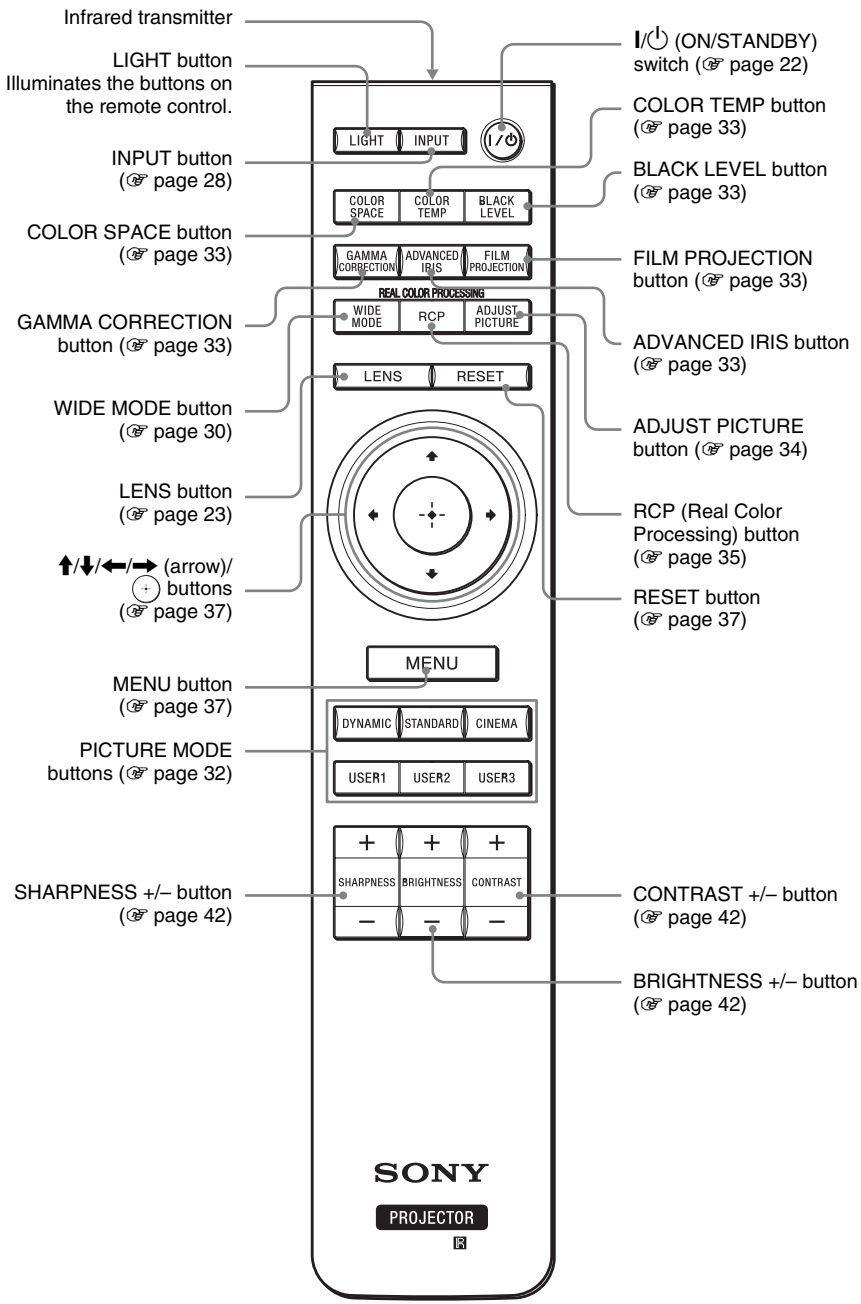

Connections and Preparations

This section describes how to install the projector and screen, how to connect the equipment from which you want to project the picture, etc.

Unpacking

Check the carton to make sure it contains the following items:

- Remote control (1)
- Size AA (R6) batteries (2)
- AC power cord (1)
- ImageDirector3 CD-ROM (1)
- Plug holder
  Attach the plug holder to avoid unplugging the AC power cord accidentally. (☞ page 14)

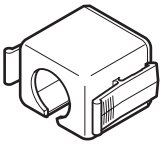

- Air filter cover (1)
  This air filter cover is used only when the projector is installed on a ceiling. (☞ page 78)

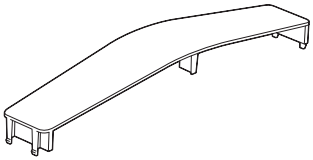

- Lens cap (1)
  When you have purchased the projector, the lens cap is put onto the lens. Remove this lens cap when you use the projector.
- Operating Instructions (this manual)

Inserting the batteries into the remote control

Push and slide to open.

Insert the batteries ⊖ side first as shown in the illustration. Inserting them forcibly or with the polarities reversed may cause a short circuit and may generate heat.

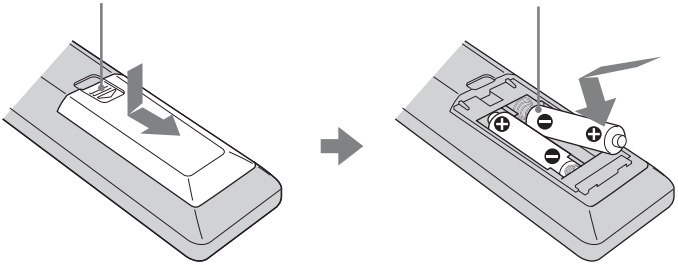

Caution about handling the remote control

- Handle the remote control with care. Do not drop or step on it, or spill liquid of any kind onto it.
- Do not place the remote in a location near a heat source, a place subject to direct sunlight, or a damp room.

Step 1: Installing the Projector

The projector displays pictures output from a VCR or other device.
The lens shift allows you to have broader options for placing the projector and viewing pictures easily.

Before Setting Up the Projector

Unsuitable installation

Do not place the projector in the following situations, which may cause malfunction or damage to the projector.

Poorly ventilated location

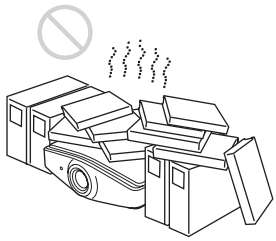

Leave space of more than 20 cm (7 $^{7}/_{8}$ inches) around the unit.

Hot and humid

Locations subject to direct cool or warm air from an air-conditioner

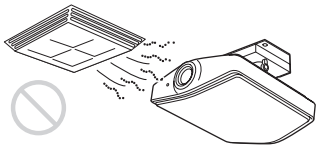

Installing the projector in such a location may cause a malfunction of the unit due to moisture condensation or rise in temperature.

Near a heat or smoke sensor

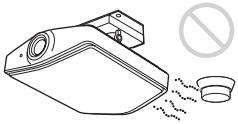

Malfunction of the sensor may occur.

Very dusty and extremely smoky locations

Install in a location away from walls

To maintain the performance and reliability of the projector, allow at least 20 cm (7 $^{7}/_{8}$ inches) between the projector and walls. Note that the wall on the rear side of the projector may become extremely hot.

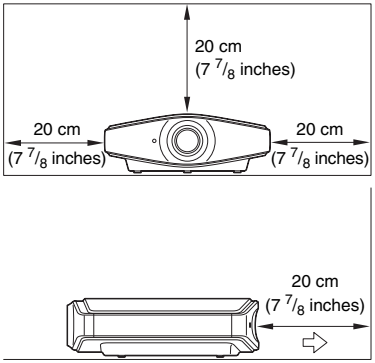

⇨ : Exhaust

Improper use

Do not do any of the following while using the projector.

Blocking the ventilation holes.

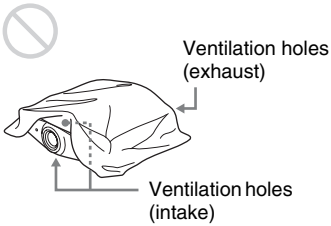

Tip

For details on the location of the ventilation holes (intake or exhaust), see “Location of Controls” on pages 8 to 9.

Tilting front/rear and left/right

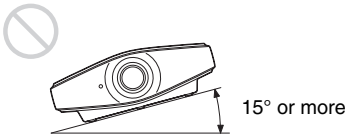

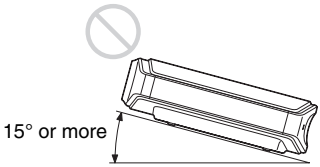

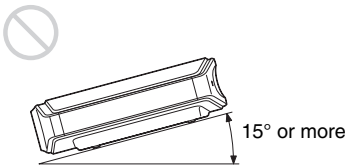

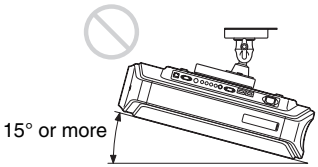

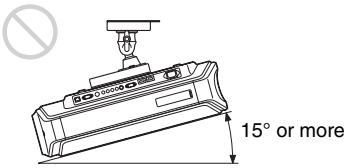

Avoid using the projector tilted at an angle of more than 15 degrees.
Do not install the projector anywhere other than on a level surface or on the ceiling. Failing to set this mode when using the projector at high altitudes may result in uneven color uniformity and reducing the reliability of the effects of the lamp.

When installing the unit at altitudes

When using the projector at an altitude of 1,500 m or higher, set “Cooling Setting” in the Setup menu to “High” (☞ page 48). Failing to set this mode when using the projector at high altitudes could have adverse effects, such as reducing the reliability of certain components.

Connecting the AC Power Cord

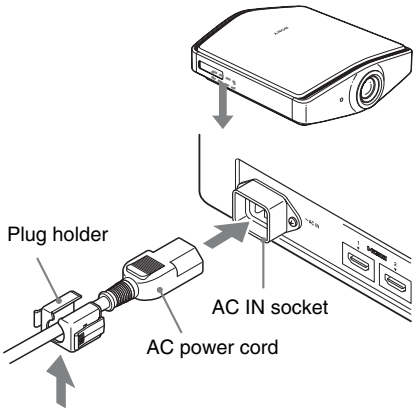

1 Plug the AC power cord into the AC IN socket (power connector) of the projector. Then, attach the plug holder to the AC power cord.

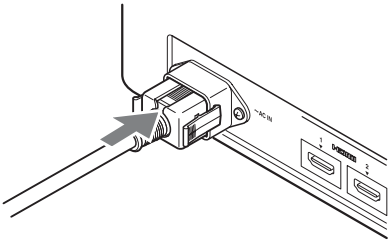

2 Slide the plug holder over the cord until it locks.

To remove the AC power cord

Pull out the AC power cord while pressing both sides of the lock levers of the plug holder.

Positioning the Projector and a screen

The installation distance between the projector and a screen varies depending on the size of the screen.

1 Determine the installation position of the projector and screen.

You can obtain a good quality picture if you position the projector with the center of the lens within the areas indicated in the gray areas in the illustration. Use the values a, b and c in the table on page 16 as a guide.

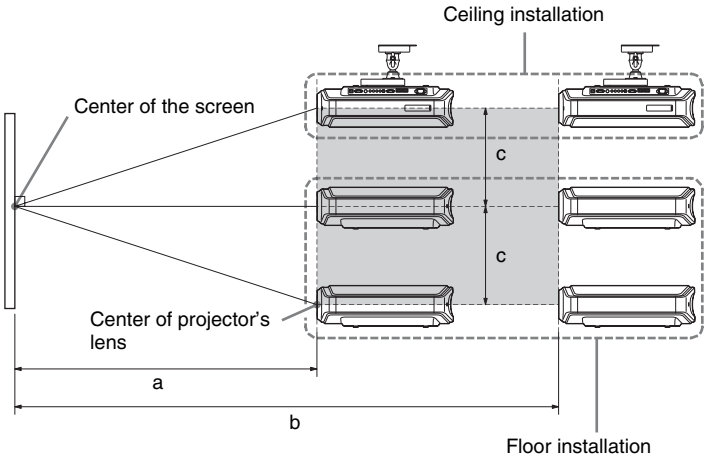

a: Minimum projection distance between the screen and the center of the projector's lens

b: Maximum projection distance between the screen and the center of the projector's lens

c: Vertical distance between the center of the screen and the center of the projector's lens when using the maximum upper vertical lens shift feature.

For installation of the projector on a ceiling, see "Ceiling Installation." (☞ page 78)
For details on the lens shift feature, see "Step 3: Adjusting the Picture Position." (☞ page 22)

When using the 16:9 aspect ratio screen

Unit: mm (inches)

Screen size (inches)	40	60	80	100	120	150	180	200	250	300
(mm)	1016	1524	2032	2540	3048	3810	4572	5080	6350	7620
a (minimum)	1212 (47 3/4)	1842 (72 5/8)	2472 (97 3/8)	3102 (122 1/4)	3732 (147)	4677 (184 1/4)	5622 (221 3/8)	6252 (246 1/4)	7827 (308 1/4)	9402 (370 1/4)
b (maximum)	2105 (82 7/8)	3181 (125 1/4)	4257 (167 5/8)	5333 (210)	6409 (252 3/8)	8023 (315 7/8)	9637 (379 1/2)	10713 (421 7/8)	13403 (527 5/8)	16093 (633 5/8)
c	324 (12 7/8)	485 (19 1/8)	647 (25 1/2)	809 (31 7/8)	971 (38 1/4)	1213 (47 7/8)	1456 (57 3/8)	1618 (63 3/4)	2022 (79 5/8)	2426 (95 5/8)

To calculate the installation measurements (SS: Screen Size)
a (minimum) = 31.5 (1 1/4) × SS – 48.2 (1 15/16)
b (maximum) = 53.8 (2 1/8) × SS – 46.9 (1 7/8)
c = 8.0876 (11/32) × SS

When using the 4:3 aspect ratio screen (projecting a 4:3 picture)

Unit: mm (inches)

Screen size (inches)	40	60	80	100	120	150	180	200	250	300
(mm)	1016	1524	2032	2540	3048	3810	4572	5080	6350	7620
a (minimum)	1494 (58 7/8)	2265 (89 1/4)	3036 (119 5/8)	3807 (150)	4578 (180 1/4)	5734 (225 3/4)	6891 (271 3/8)	7662 (301 3/4)	9590 (377 5/8)	11517 (453 1/2)
b (maximum)	2587 (101 7/8)	3904 (153 3/4)	5220 (205 5/8)	6537 (257 3/8)	7854 (309 1/4)	9829 (387)	11805 (464 7/8)	13122 (516 5/8)	16414 (646 1/4)	19706 (775 7/8)
c	396 (15 5/8)	594 (23 1/2)	792 (31 1/4)	990 (39)	1188 (46 7/8)	1485 (58 1/2)	1782 (70 1/4)	1980 (78)	2474 (97 1/2)	2969 (117)

To calculate the installation measurements (SS: Screen Size)
a (minimum) = 38.551 (1 9/16) × SS – 48.2 (1 15/16)
b (maximum) = 65.842 (2 5/8) × SS – 46.9 (1 7/8)
c = 9.8979 (13/32) × SS

2 Position the projector so that the lens is parallel to the screen.

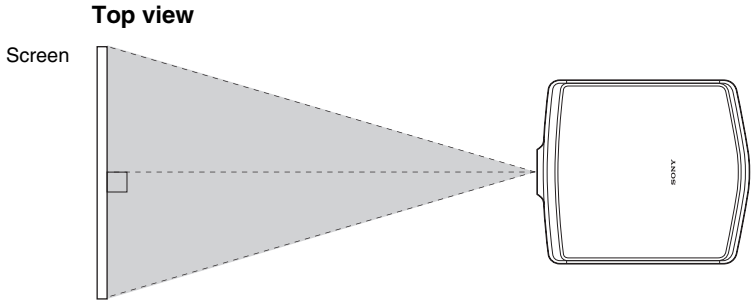

3 Project an image on the screen and adjust the picture so that it fits the screen. (☞ page 22)

To project an image, connect video equipment to the projector. (☞ page 18)

Note

When using a screen with an uneven surface, stripes pattern may rarely appear on the screen depending on the distance between the screen and the projector or the zooming magnifications. This is not a malfunction of the projector.

Step 2: Connecting the Projector

When making connections, be sure to do the following:

- Turn off all equipment before making any connections.
- Use the proper cables for each connection.
- Insert the cable plugs properly; poor connection at the plugs may cause a malfunction or poor picture quality. When pulling out a cable, be sure to pull it out from the plug, not the cable itself.
- Refer to the operating instructions of the connected equipment.

Connecting to a VCR

To connect to a DVD player/recorder, Blu-ray Disc player or digital tuner equipped with component video connectors

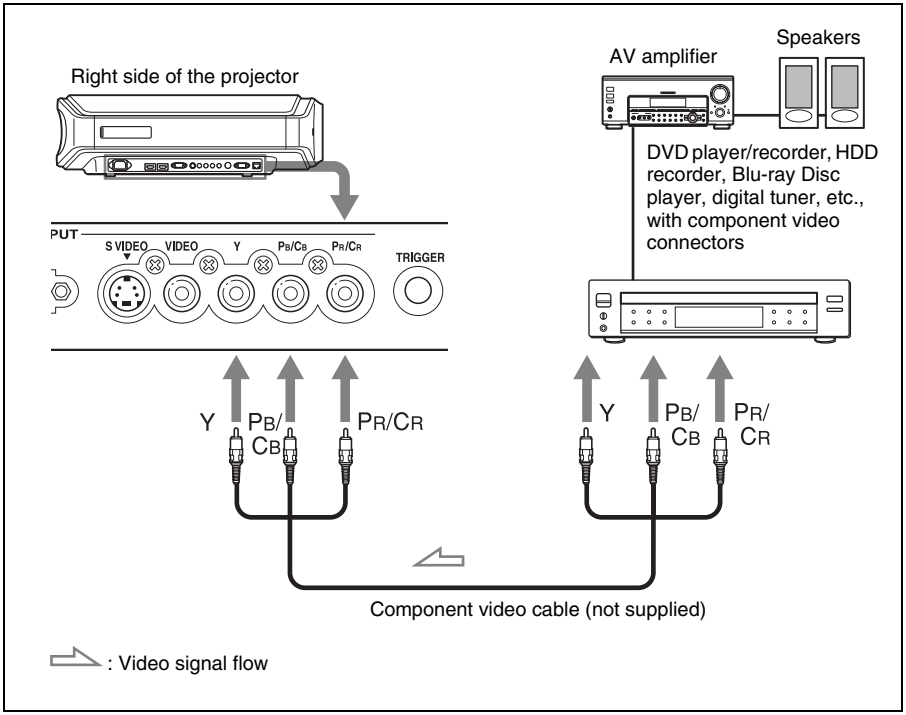

To connect to a DVD player/recorder or Blu-ray Disc player equipped with HDMI output

You can enjoy better picture quality by connecting a DVD player/recorder or Blu-ray Disc player equipped with HDMI output to the HDMI input of the projector. Moreover, if you have an HDMI control compatible equipment, you can operate the projector synchronizing with the HDMI control compatible equipment. For details, see the Function menu (☞ page 50) and "About the HDMI Control" (☞ page 59).

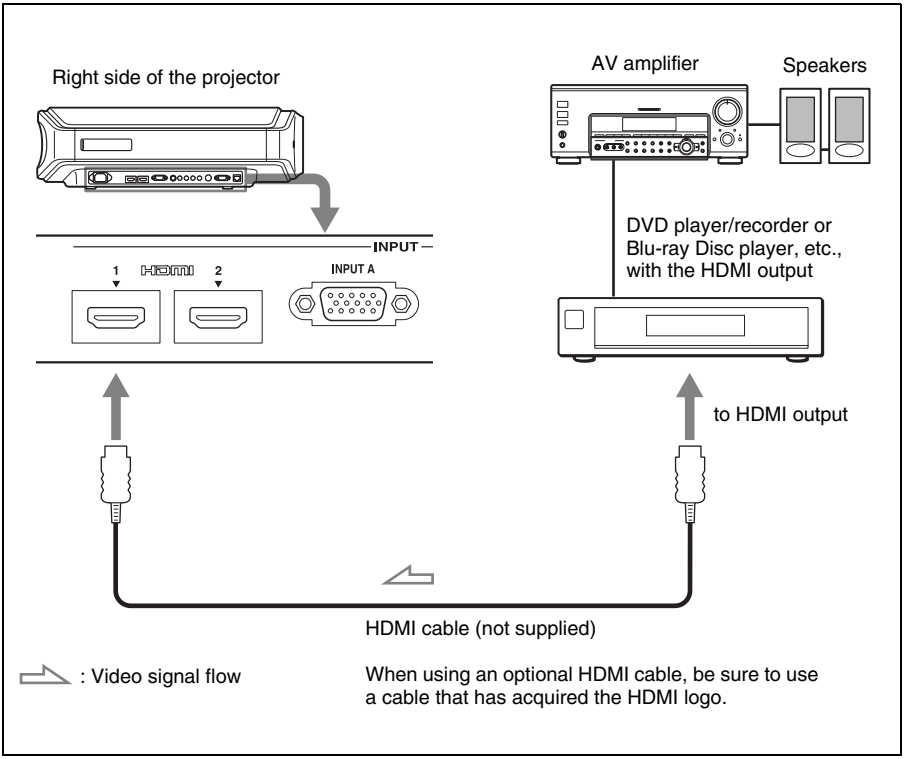

Notes

- When connecting equipment to the HDMI input of the projector, be sure to use equipment that have acquired the HDMI logo.
- When connecting an HDMI cable to the projector, make sure the ▼ mark on the upper part of the HDMI input of the projector and the ▼ mark on the connector of the cable is set at the same position.
- If the picture from equipment connected to the projector with an HDMI cable is not clear, check the settings of the connected equipment.

HDMI Control is an HDMI standard mutual control function which uses the HDMI CEC (Consumer Electronics Control) specification.
This projector supports DeepColor, x.v.Color, LipSync, and PC Display input of HDMI standards. It also supports HDCP.

To connect to a VCR equipped with the S video connector or video connector

You can connect a DVD player/recorder, hard disk video recorder, VCR or laser disk player, which is not equipped with component video connectors. See also the instruction manual of each equipment.

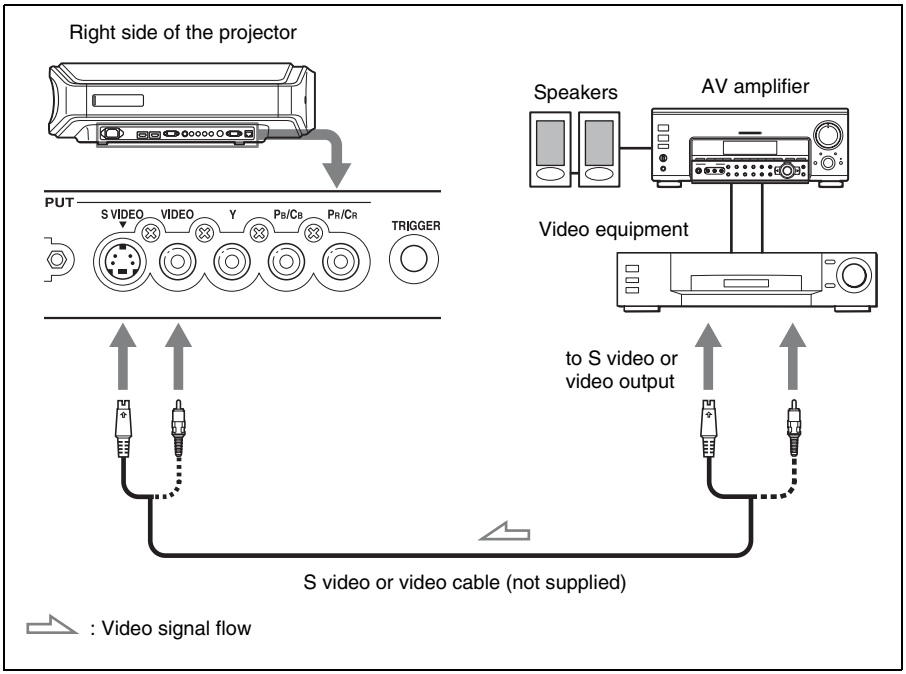

Tip

If you do not know to which connector you should connect the cable, S VIDEO INPUT (S video input connector) or VIDEO INPUT (video input connector), connect it to S VIDEO to enjoy better picture quality.

If the equipment to be connected has no S video connector, connect the cable to the video output.

Connecting to a Computer

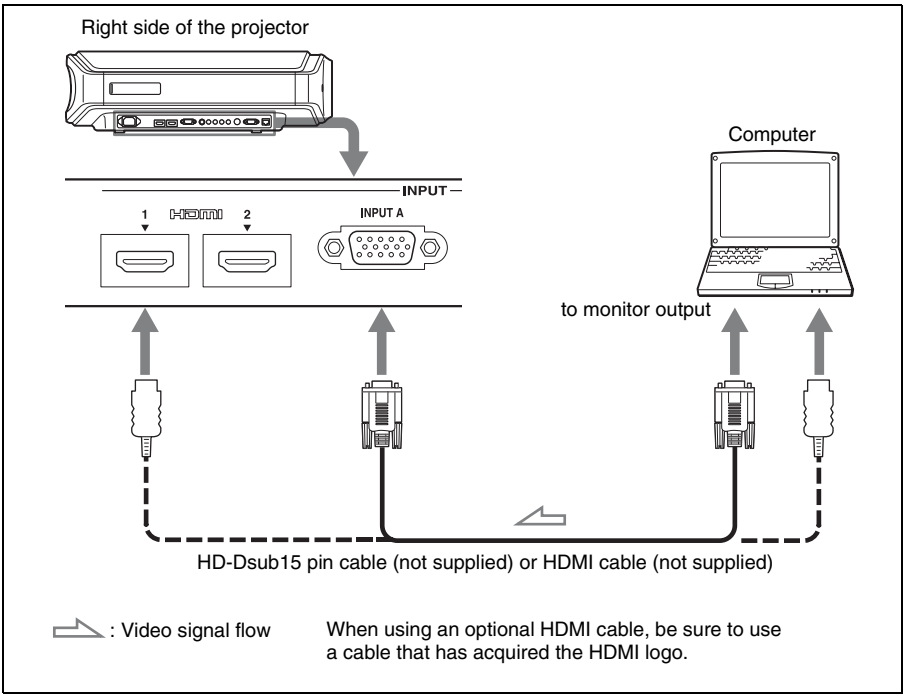

Tip

Set "Input-A Signal Sel." in the Setup menu to "Auto." If the input signal does not appear properly, set it to "Computer." (☞ page 49, 63)

Notes

- When connecting an HDMI cable, make sure the ▼ mark on the upper part of the HDMI input of the projector and the ▼ mark on the connector of the cable is set at the same position.
- If you set your computer, such as a notebook type, to output the signal to both computer's display and this equipment, the picture of the equipment may not appear properly. Set your computer to output the signal to only the external monitor.
  For details, refer to the computer's operating instructions supplied with your computer.
  For settings of the computer, consult with the manufacturer of the computer.
- If the picture from equipment connected to the projector with an HDMI cable is not clear, check the settings of the connected equipment.

Step 3: Adjusting the Picture Position

Project an image on the screen and then adjust the picture position.

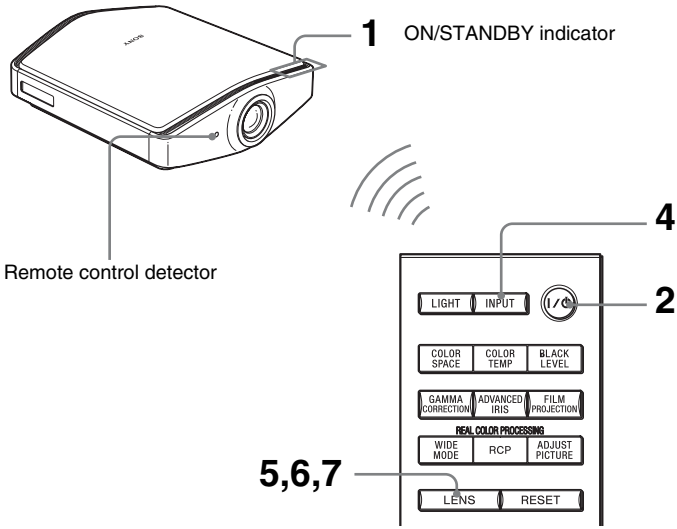

Tip

The I/⏻ (ON/STANDBY), INPUT, LENS, MENU, and ↑/↓/←/→/◎ (joystick) buttons on the side panel of the projector function the same as those on the remote control.

Note

Depending on the installation location of the projector, you may not control it with the remote control. In this case, point the remote control to the screen instead of the projector.

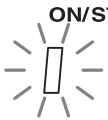

Lights in red.

1 Plug the power plug into the wall outlet.

The ON/STANDBY indicator lights in red and the projector goes into standby mode.

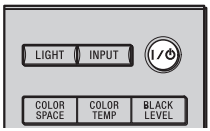

Flashes in green for a few seconds, and then lights in green.

2 Press the I/⏻ (ON/STANDBY) switch to turn on the projector.

The ON/STANDBY indicator flashes in green, and then lights in green.

3 Turn on the equipment connected to the projector.

Refer to the operating instructions of the connected equipment.

4 Press INPUT to project the picture on the screen.

Each time you press the button, the input indication and equipment to be projected change. (☞ page 28)

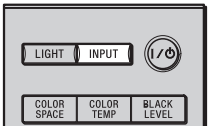

Tips

- You can select the desired language for the menu screen. For details, refer to "Step 4: Selecting the Menu Language". (☞ page 26)
- When "Auto Input Search" is set to "On" in the Function menu, the input terminal with effective signals is automatically displayed by pressing INPUT. (☞ page 50)

5 Adjust the vertical picture position.

Press the LENS button repeatedly until the Lens Shift adjustment window (test pattern) appears. Then select the proper vertical position by pressing the ↑/↓/←/→ buttons. Each time you press the LENS button, the LENS adjustment window appears in order.

Lens Focus → Lens Zoom → Lens Shift

To move the position upward, press ↑/→.

To move the position downward, press ↓/←.

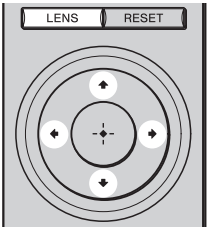

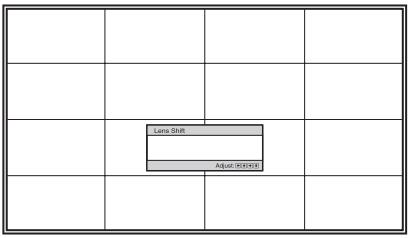

Tip

When "Lens Control" is set to "Off" on the Installation menu, you cannot adjust the vertical picture position. (☞ page 52)
When "Test Pattern" is set to "Off" on the Function menu, the test pattern is not displayed. (☞ page 51)

The picture moves up by a maximum of 65% of the screen size from the center of the lens.

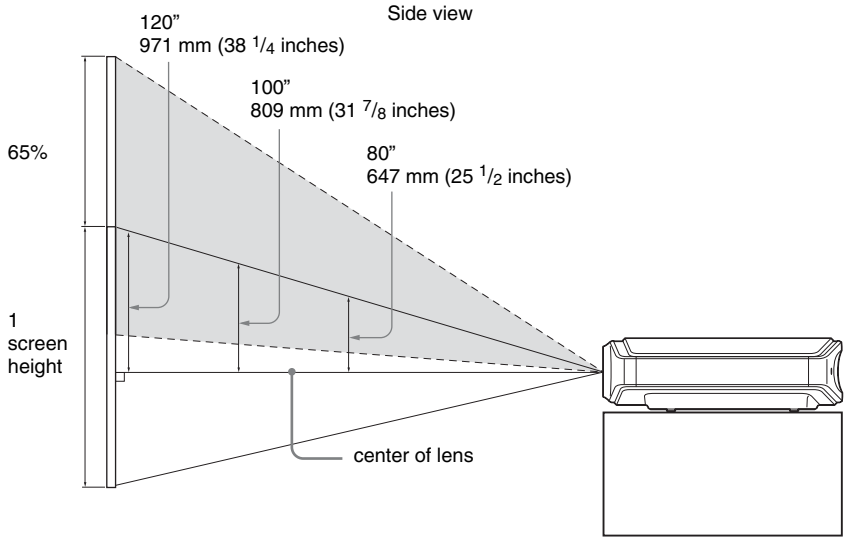

(When using the 16:9 screen. For more details, see page 16.)

: Picture position when the picture is moved upward at the maximum

Tip

You can also adjust the horizontal position of the lens. For detailed information, see “Making Fine Adjustments to the Horizontal Picture Position” on page 82.

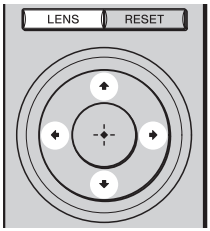

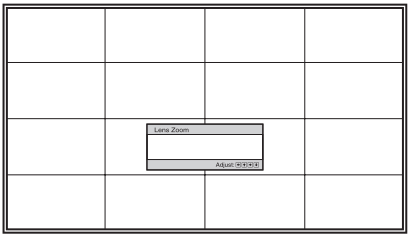

6 Adjust the picture size.

Press the LENS button repeatedly until the Lens Zoom adjustment window (test pattern) appears. Then adjust the size of the picture by pressing the ↑/↓/←/→ buttons.
To make the picture larger, press ↑/→.
To make the picture smaller, press ↓/←.

Tip

When “Lens Control” is set to “Off” on the Installation menu, you cannot adjust the picture size and the focus. (☞ page 52)

When “Test Pattern” is set to “Off” on the Function menu, the test pattern is not displayed. (☞ page 51)

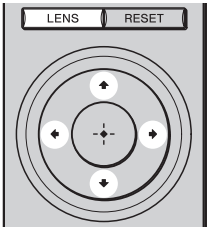

7 Adjust the focus.

Press the LENS button repeatedly until the Lens Focus adjustment window (test pattern) appears. Then adjust the focus of the picture by pressing the ↑/↓/←/→ buttons.

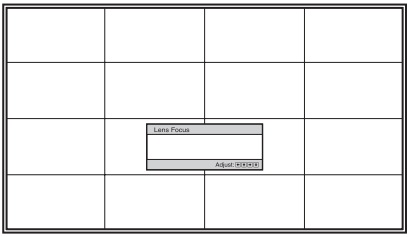

To adjust the tilt of the installation surface

If the projector is installed on an uneven surface, use the adjusters to keep the projector level.

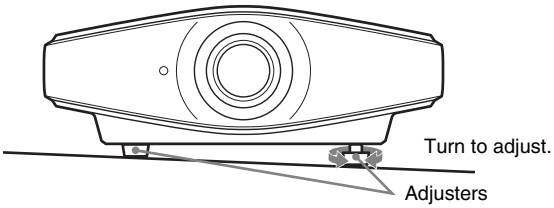

Note

Be careful not to catch your finger when turning the adjusters.

Step 4: Selecting the Menu Language

You can select one of 16 languages for displaying the menu and other on-screen displays. The factory default setting is English. To change the current menu language, set the desired language with the menu screen.

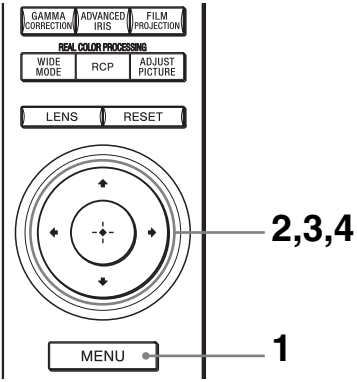

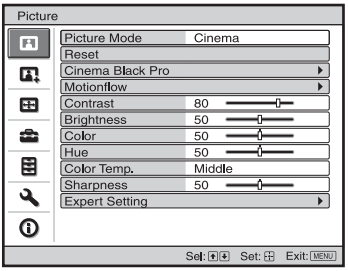

1 Press MENU.

The menu appears.

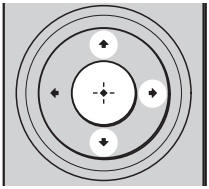

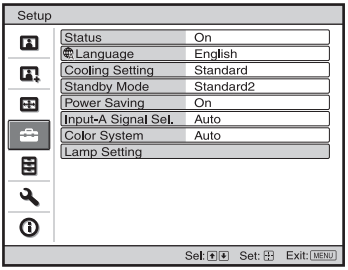

2 Press ↑/↓ to select the Setup menu, and press → or ⊕.

The setting items of the selected menu appears.

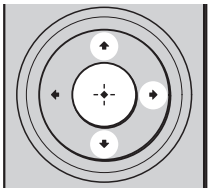

3 Press ↑/↓ to select "Language," and press → or ⊕.

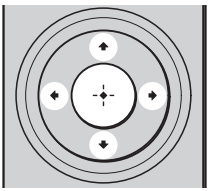

4 Press ↑/↓/←/→ to select a language, and press ⊕.

The menu changes to the selected language.

To clear the menu

Press MENU.

Projecting

This section describes how to operate the projector to view the picture from the equipment connected to the projector. It also describes how to adjust the quality of the picture to suit your taste.

Projecting the Picture on the Screen

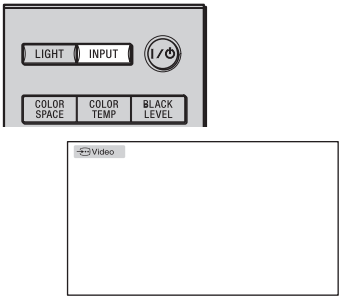

Example: To view the picture from the video equipment connected to the VIDEO INPUT connector.

1 Power on both the equipment and the device connected to the equipment.

2 Press INPUT repeatedly to select the input you want to project on the screen.

Display the indication of the input you want.

To view the picture from	Press INPUT to display
Video equipment connected to the VIDEO INPUT connector	Video
Video equipment connected to S VIDEO INPUT connector	S-Video
Component equipment connected to Y PB/CB PR/CR on the projector	Component
RGB/component equipment connected to the INPUT A connector	Input-A*
Equipment connected to the HDMI 1 connector	HDMI1**
Equipment connected to the HDMI 2 connector	HDMI2**

* Set the "Input-A Signal Sel." setting in the Setup menu according to the signal input. When you set it to "Auto," and cannot display the picture properly, select an appropriate signal according to the input signal. (☞ page 49, 55)

** The color gradation of the dark area or the bright area may become unclear when a signal other than those from HDMI standard is input. Adjust the "Brightness" and the "Contrast" in the Picture menu. (☞ page 42)

Tips

- When “Auto Input Search” is set to “On” in the Function menu, the input terminal with effective signals is automatically displayed by pressing INPUT.
- When the “HDMI Control” is set to “On” in the Function menu, the input terminal with effective signals is automatically displayed, synchronizing with the operation of the equipment connected to HDMI 1 or HDMI 2 input of the projector.

Turning Off the Power

1 Press the I/⏻ (ON/STANDBY) switch.

A message “POWER OFF?” appears on the screen.

2 Press the I/⏻ (ON/STANDBY) switch again before the message disappears.

The ON/STANDBY indicator flashes in green and the fan continues to run to reduce the internal heat. First, the ON/STANDBY indicator flashes quickly, during which you will not be able to light up the ON/STANDBY indicator with the **I/⏻** (ON/STANDBY) switch.

3 Confirm that the fan stops running and the ON/STANDBY indicator lights in red.

You can turn off the projector by holding the **I/⏻** (ON/STANDBY) switch for about one second, instead of performing the above steps.

Tip

When the projector is connected to an HDMI control compatible equipment, the HDMI control compatible equipment synchronizes with the operation of the projector. When you turn the power of the projector off, the power of the HDMI control compatible equipment will also turn off.

Selecting the Wide Screen Mode

You can enjoy various wide screen modes according to the video signal received.

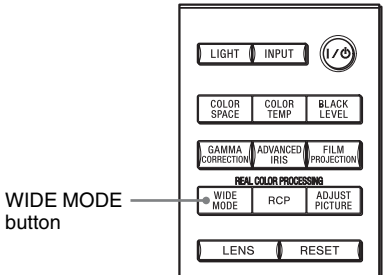

Press WIDE MODE.

Each time you press the button, you can select the "Wide Mode" setting.
You can also select it using the menu. (☞ page 46)

Original image **When the Wide Mode is operated**

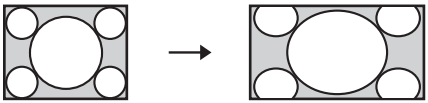

Wide Zoom

A 4:3 aspect ratio picture is enlarged over the entire screen properly. The upper and lower portions of the screen are slightly cut off.

Normal

A picture with normal 4:3 aspect ratio is displayed in the center of the screen to fill the vertical screen size.

Squeezed

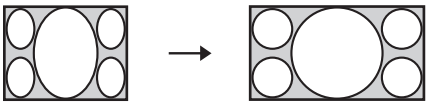

Full

A picture squeezed to 4:3 is displayed with the correct aspect ratio. A 4:3 picture is enlarged horizontally to fit the 16:9 screen.

Tip

Squeezed: An original 16:9 aspect ratio picture is recorded horizontally compressed to a 4:3 picture.

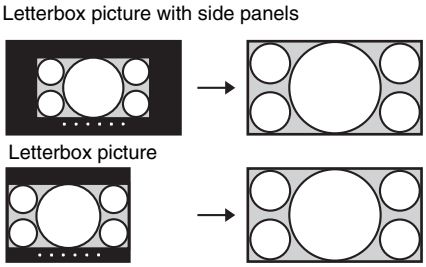

Zoom

A normal 16:9 aspect ratio picture is enlarged vertically and horizontally in the same ratio to fill the screen. Use this mode to view a letterbox picture or a letterbox picture with side panels.
If the subtitle of a movie, etc. is hidden and cannot be seen, adjust the screen with "Vertical Size" and "V Center" to display the subtitle. (☞ page 47)

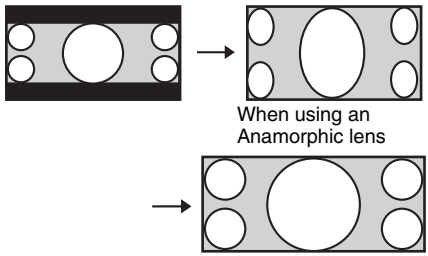

Anamorphic Zoom

A 2.35:1 aspect ratio picture is converted to a normal 16:9 picture on the screen. This mode is best suited when using a commercially available Anamorphic lens which converts a normal 16:9 aspect ratio picture to a 2.35:1 picture.

Full1 (When the PC signal is input)

Displays a picture on the whole of the screen without changing the aspect ratio of the original picture.

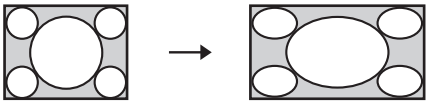

Full2 (When the PC signal is input)

Displays a picture on the whole of the screen.

Note

You can adjust the vertical position of the picture with "V Center" and "Vertical Size" in the Screen menu only when "Zoom" is selected. (☞ page 47)

Notes on selecting the wide screen mode

The projector is featured with the WIDE MODE. When changing the settings of WIDE MODE, use caution as described below.

- Select the wide screen mode taking into account that changing the aspect ratio of the original picture will provide a different look from that of the original image.
- Note that if the projector is used for profit or for public viewing, modifying the original picture by switching to the wide mode may constitute an infringement of the rights of authors or producers, which are legally protected.

Selecting the Picture Viewing Mode

You can select the picture viewing mode that best suits the type of program or room conditions.

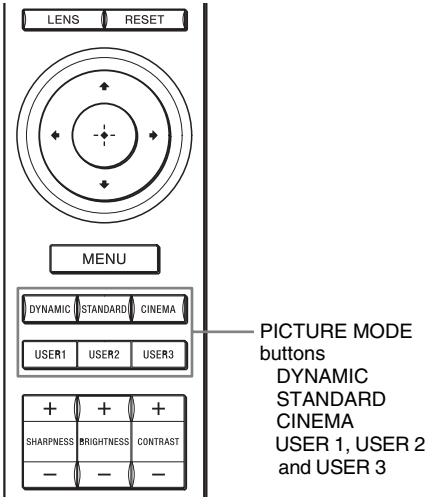

Press one of the PICTURE MODE buttons (DYNAMIC, STANDARD, CINEMA and USER 1, USER 2 and USER 3).

DYNAMIC

Enhances picture contrast and sharpness.

STANDARD

The quality of the picture becomes less rough than the one selected by "DYNAMIC".

CINEMA

Recommended when viewing a movie in the dark place.

USER 1, USER 2 and USER 3

You can adjust the quality of the picture to suit your taste and store the settings into the selected memory of the projector. Press one of the USER 1, USER 2 and USER 3 buttons, then adjust the picture by using the buttons on the remote control or the menus (☞ pages 33, 41). The settings are stored, and you can view the picture with the adjusted picture quality by pressing the button.

Adjusting the Picture Quality

You can easily adjust the picture quality that suits your taste by selecting the adjustment items with the remote control. The adjusted data can be stored in each picture mode.

Selecting to directly adjust the desired menu item

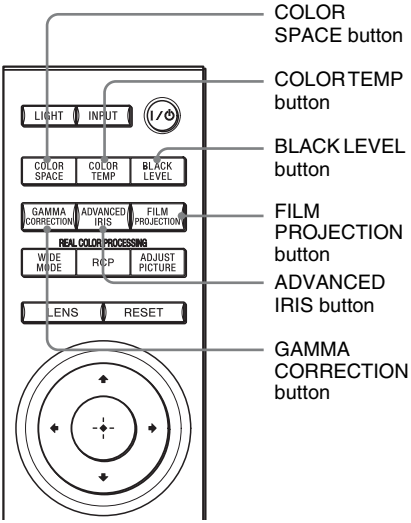

COLOR SPACE button

Adjusts the range of color reproduction on the screen.
Each time you press the button, the setting is switched either to “Normal” or “Wide” to change the range of color reproduction on the screen.

COLOR TEMP button

Each time you press the button, the setting of the button is changed in the order of “High,” “Middle,” “Low,” “Custom1,” “Custom2”, “Custom3”.

BLACK LEVEL button

Each time you press the button, the setting of the button is changed in the order of “High”, “Low”, “Off”.

FILM PROJECTION button

Each time you press the button, the setting of “Film Projection” is changed in the order of “Mode1”, “Mode2”, “Mode3” and “Off”.

ADVANCED IRIS button

Adjusts the desired iris when projecting a picture.
Each time you press the button, the setting of the button is changed in the order of “Auto1”, “Auto2”, “Manual” and “Off”.

GAMMA CORRECTION button

Each time you press the button, the setting of the button is changed in the order of “Gamma1”, “Gamma2”, “Gamma3”, and “Off”.

Selecting desired adjust menu items in the order

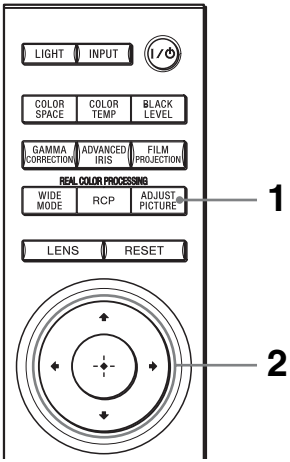

1 Press ADJUST PICTURE.

Each time you press the button, the following adjustment windows are displayed in sequence.

Advanced Iris
↓
Film Projection
↓
Motion Enhancer
↓
Contrast
↓
Brightness
↓
Color
↓
Hue
↓
Color Temp.
↓
Sharpness
↓
NR
↓
DRC Mode
↓
Film Mode
↓
Black Level Adj.
↓
Gamma Correction
↓
x.v.Color

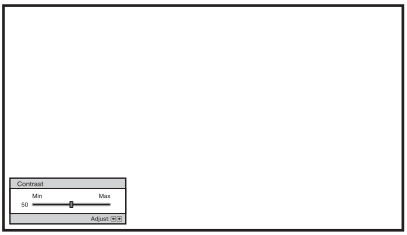

Example: To adjust the contrast

For details on each adjustment, see the Picture menu. (☞ page 41)

Note

Some adjustment windows cannot be displayed, depending on the type of input signal. For details, see "Input Signals and Adjustable/Setting Items" (☞ page 76)

2 Make the setting or adjustment on an item.

When changing the adjustment level

To increase the value, press ➡.
To decrease the value, press ⬅.

When changing the setting

Press ⬆/⬇ to change the setting.

Adjusting the Picture Using Real Color Processing

The Real Color Processing (RCP) feature allows you to adjust the color and hue of each target of the projected picture you specify independently. You can thus obtain a picture more suitable to your taste.

Tip

Freeze the scene of the video source when you are adjusting the picture using Real Color Processing.

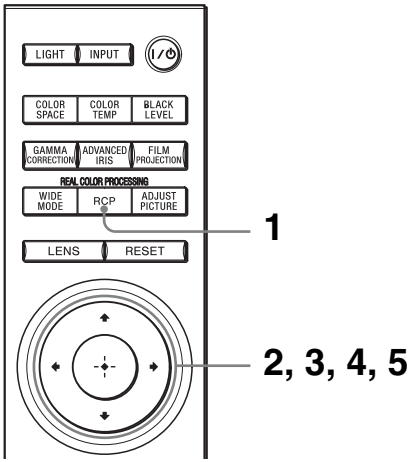

1 Press RCP on the remote control.

2 Press ↑/↓ to select "User1," "User2" or "User3," then press →.

The RCP (Real Color Processing) window appears.

3 Select the target color you want to adjust.

Repeat steps ❶ and ❷ described below to specify the target color.

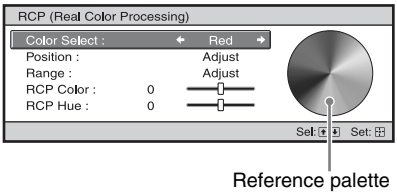

❶ Press ↑/↓ to select "Color Select," then press ←/→ to select the color you want to adjust among "Red," "Yellow," "Green," "Cyan," "Blue" and "Magenta."

Only the portions that correspond to the specified color will be colored and the other portions will be displayed in black and white. The reference palette in the RCP window also shows the adjustable colors. Select the desired setting to adjust the color on the projected image using the reference palette as a guide.

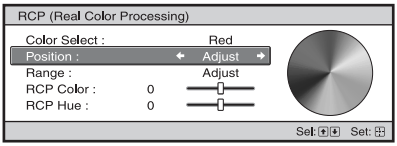

❷ Press ↑/↓ to select "Position" or "Range," and specify it more delicate color position and color range you want to adjust using ←/→.

4 Adjust the color of the specified portions.

Press ↑/↓ to select "RCP Color" or "RCP Hue," then adjust the color or hue of the portions selected in step 3 to suit your taste using ←/→ while watching the projected picture. The picture is returned to normal color during adjustment.

5 After the adjustment is complete, press ⊕.

The RCP window disappears and the picture of step 2 is appeared. Then after a few seconds, normal picture is restored.

Tip

There are some limitations on selection of position and range.

Using the Supplied Software to Adjust the Picture Quality (ImageDirector3)

By using the "ImageDirector3" (supplied as a CD-ROM), you can make the desired gamma correction from a computer connected to the projector. Connect the REMOTE or the NETWORK connector of the projector with a computer and start-up "ImageDirector3" on the computer.
For details on how to use the "ImageDirector3", refer to the Help within the CD-ROM.

Notes

- You need to install the "ImageDirector3" on a computer beforehand.
- When connecting the REMOTE connector or the NETWORK connector with a computer, connect while the power of the computer and the projector are off.

Using the Menus

This section describes how to make various adjustments and settings using the menus.

Operation through the Menus

The projector is equipped with an on-screen menu for making various adjustments and settings. Some of the adjustable/setting items are displayed in a pop-up menu, in a setting menu or adjustment menu with no main menu, or in the next menu window. If you select an item name followed by an arrow (▶), the next menu window with setting items appears. To change the on-screen menu language, see "Step 4: Selecting the Menu Language." (☞ page 26)

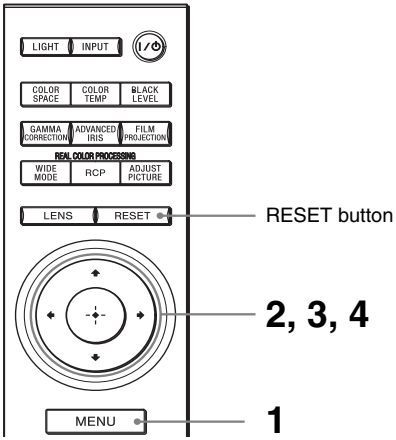

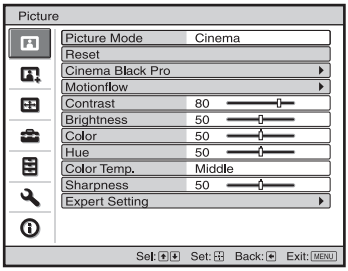

1 Press MENU.

The menu window appears.

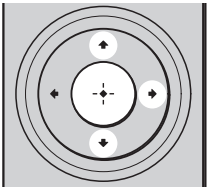

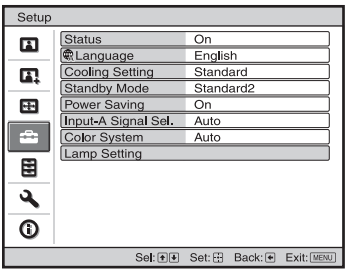

2 Press ↑/↓ to select a menu item, and press → or ⊕.

The items that can be set or adjusted with the selected menu appear. The item presently selected is shown in yellow.

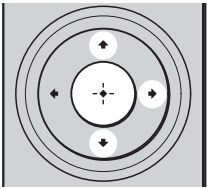

Pop-up menu

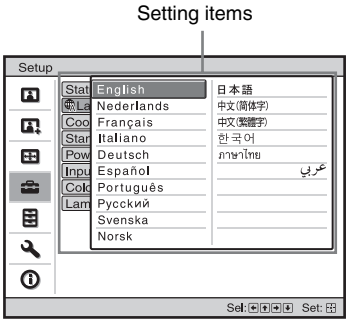

Setting menu

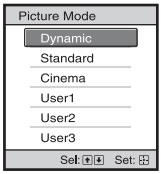

Adjustment menu

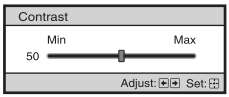

Next menu window

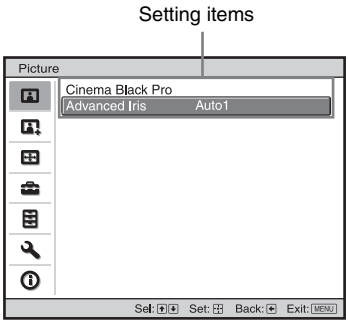

3 Press ↑/↓ to select an item you want to set or adjust and press → or ⊕.

The setting items are displayed in a pop-up menu, in a setting menu, in an adjustment menu or in the next menu window.

4 Make the setting or adjustment of an item.

When changing the adjustment level
To increase the value, press ↑/→.
To decrease the value, press ↓/←.
Press ⊕ to restore the original screen.

When changing the setting
Press ↑/↓ to change the setting.
Press ⊕ to restore the original screen.
You can restore the original screen using ← depending on the selected item.

Items that cannot be adjusted

Adjustable items differ depending on the input signal. The items that cannot be adjusted or set do not appear in the menu. (☞ page 76)

To clear the menu

Press MENU.

To reset the picture that has been adjusted

Select "Reset" from Picture menu.

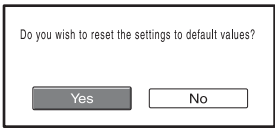

When the screen display appears, select "Yes" using ← and press ⊕.
All of the following settings are reset to its factory preset value.
The settings of "Cinema Black Pro", "Motionflow", "Contrast", "Brightness", "Color", "Hue", "Color Temp", "Sharpness" and "Expert Setting" on the Picture menu

To reset the items that have been adjusted

Select an item in the Menu screen, and display the pop-up menu, the setting menu, and the adjustment menu.
Press the RESET on the remote control to reset only the selected settings to its factory preset value.

Note

RESET button on the remote control is available only when the adjustment menu or the setting menu is selected.

Picture Menu

The Picture menu is used for adjusting the picture.

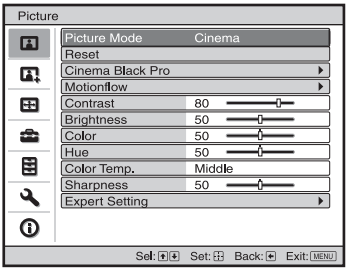

Picture Mode	**You can select the picture viewing mode that best suits the type of picture or the environment.** **Dynamic:** Select this for enhanced picture contrast and sharpness to reproduce color tones. **Standard:** Select this to reduce roughness compared to viewing the picture with "Dynamic". **Cinema:** Select this for watching movies, etc. in a dark environment. **User1, User2, User3:** You can adjust the quality of the picture to suit your taste and then store the settings. Once the settings are stored, you can view the picture with the adjusted picture quality by pressing the PICTURE MODE button on the remote control. **To store the settings** **1** Select User1, User2, or User3. **2** Adjust the items you want in the menus. **Tips** • You can also adjust the picture quality in "Dynamic", "Standard" or "Cinema", and store the settings. To reset everything to the factory settings, select "Reset" from the menu. • Some items may not be displayed on the Picture menu, depending on the type of input signal. For details, see "Input Signals and Adjustable/ Setting Items" (☞ page 76).
Cinema Black Pro	**Advanced Iris** **Switches the iris function during projection.** **Auto1:** Automatically switches to an optimum iris according to a projected scene. The contrast of the scene is emphasized most. **Auto2:** An optimum iris becomes smaller than when set to "Auto1". The contrast of the scene becomes reduced. **Sensitivity**: If "Auto1" or "Auto2" is selected, either "Recommend", "Fast", or "Slow" can be selected according to the desired response speed with Sensitivity Mode. **Manual:** Manually adjusts the Iris. Manual Min Max 50 Adjust: Set: **Off:** Normal contrast.

Motionflow	**Film Projection** **Reproduces movies in its original moving picture.** **Mode1:** Best suited for watching movies. **Mode2:** Suited for watching movies. The picture is brighter than in "Mode1". **Mode3:** Suited for watching movies. The picture is brighter than in "Mode2". **Off:** Normal picture. **Note** When you select "Mode1"or "Mode2", the picture will become slightly darker than in "Off".
	Motion Enhancer **Reproduces fast-moving pictures smoothly without generating afterimages.** **High:** Select this for picture quality smoother than "Low". **Low:** Select this for smooth picture quality. **Off:** Select "Off" when noise, etc. appears in "High" or "Low". Usually, set "Motion Enhancer" to "Off".
Contrast	**Adjusts the white area of pictures (white level).** The higher the setting, the greater the contrast. The lower the setting, the lower the contrast. You can make adjustments by pressing the CONTRAST+/– on the remote control.
Brightness	**Adjusts the brightness of the picture.** The higher the setting, the brighter the picture. The lower the setting, the darker the picture. You can make adjustments by pressing the BRIGHTNESS+/– on the remote control.
Color	**Adjusts the intensity of the color density.** The higher the setting, the greater the intensity. The lower the setting, the lower the intensity.
Hue	**Adjusts the color tone.** The higher the setting, the more greenish the picture becomes. The lower the setting, the more reddish the picture becomes.
Color Temp.	**Adjusts the color temperature.** **High:** Gives white colors a blue tint. **Middle:** Gives a neutral tint between "High" and "Low". **Low:** Gives white colors a red tint. **Custom1, Custom2, Custom3:** Enables you to adjust, set, and store your favorite color temperature.
Sharpness	**Sharpens the outline of the picture, or reduces the noise.** The higher the setting, the sharper the picture. The lower the setting, the softer the picture, thus reducing the noise. You can make adjustments by pressing the SHARPNESS+/– on the remote control.

Expert Setting	**NR (Noise Reduction)** **Reduces the roughness or noise of the picture.** Usually, select “Off”. If the picture is rough or noisy, select a setting from among “Low”, “Middle” or “High” according to the input signal source.
	DRC Mode **Sets the picture quality to be best suited for the input signal.** **Mode 1:** Select this for sharp picture from input signal without side panel information, etc. **Mode 2:** Select this for sharp picture from input signal with side panel information, etc. **Off:** Does not convert the input signal to DRC. **Note** Depending on the input signal, the picture quality of “Mode1”and “Mode2” may not differ. **DRC Palette:** You can adjust the “Reality” and “Clarity” of a picture as desired on the DRC palette when selecting “Mode 1” or “Mode 2”. 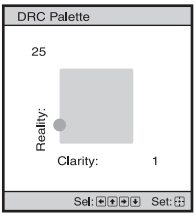 To increase the value for “Clarity,” press the ➡ button. To decrease the value for “Clarity,” press the ⬅ button. To increase the value for “Reality,” press the ⬆ button. To decrease the value for “Reality,” press the ⬇ button.
	Film Mode **Reproduces 2-3 or 2-2 Pull-Down film sources with smooth picture movement.** **Auto1:** Automatically detects the 2-3 or 2-2 Pull-Down format and performs film conversion. Smooth moving picture is emphasized than in “Auto2”. **Auto2:** Automatically detects the 2-3 or 2-2 Pull-Down format and performs film conversion. **Off:** Does not detect the 2-3 or 2-2 Pull-Down format.
	Black Level Adj. (Adjust) **Produces a bolder, dynamic picture.** Set according to the input signal source. **High:** Gives higher emphasis to the black color. **Low:** Gives lower emphasis to the black color. **Off:** Cancels this feature. **Note** Depending on the setting of x.v.Color, this item cannot be set.

	Gamma Correction **Adjusts the response characteristics of the tone of the picture.** Select a favorite tone from three options. **Gamma1:** Makes a scene a little brighter. **Gamma2:** Makes a scene brighter. **Gamma3:** Makes a scene darker. **Off:** Gamma Correction is “Off” Using the specified controller, “ImageDirector3” (supplied as a CD-ROM) allows you to adjust, set, and store a favorite tone in a computer. For detailed information on “ImageDirector3”, refer to the Help provided on the supplied CD-ROM in the computer. **Note** Depending on the setting of x.v.Color, this item cannot be set.
	x.v.Color **Set this item when playing back an x.v.Color video signal.** Set this item to “On” when connecting the projector with equipment that supports x.v.Color and playing back an x.v.Color video signal. For details on x.v.Color, see “About the x.v.Color” (☞ page 59).

Advanced Picture Menu

The Advanced Picture is used for adjusting the picture more.

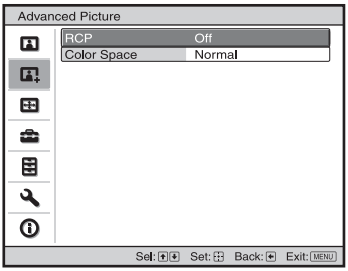

RCP (Real Color Processing)	**You can adjust the color and hue of each selected portion of the picture independently.** **User1, User2, User3:** You can adjust the picture using Real Color Processing and store the settings. Once the settings are stored, you can view the picture with the adjusted picture quality. **Off:** Cancels this feature. For details, see "Adjusting the Picture Using Real Color Processing". (☞ page 35)
Color Space	**You can convert the range of color reproduction.** **Normal:** Converts the color to Hi-Vision color. **Wide:** Reproduces more natural color tones in a wider range of color reproduction, compared to "Normal".

Screen Menu

The Screen menu is used to adjust the input signal. You can adjust the size of the picture, and select wide screen mode, etc.

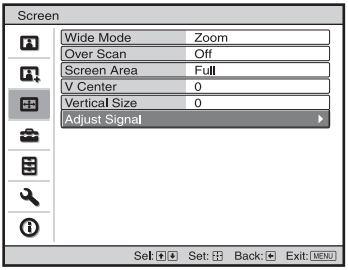

Wide Mode (When the image input signal is input)	**You can set the aspect ratio of the picture to be displayed for the current input signal. This item is enabled only when an image signal (preset memory numbers 1 to 14) (☞ page 73, 74) is input.** **Wide Zoom:** A 4:3 aspect ratio picture is enlarged over the entire screen properly. The upper and lower portions of the screen are slightly cut off. **Normal:** A picture with normal 4:3 aspect ratio is displayed in the center of the screen to fill the vertical screen size. **Full:** A picture squeezed to 4:3 is displayed with the correct aspect ratio. A 4:3 picture is enlarged horizontally to fit the 16:9 screen. **Zoom:** A normal 16:9 aspect ratio picture is enlarged vertically and horizontally in the same ratio to fill the screen. **Anamorphic Zoom:** A 2.35:1 aspect ratio picture is converted to a normal 16:9 picture on the screen. This mode is best suited when using a commercially available Anamorphic lens which converts a normal 16:9 aspect ratio picture to a 2.35:1 picture.
Wide Mode (When the PC signal is input)	**You can set the aspect ratio of the picture to be displayed for the current input signal. This item is enabled only when an PC signal is input.** **Full1:** Displays a picture on the whole of the screen without changing the aspect ratio of the original picture. **Full2:** Displays a picture on the whole of the screen. **Zoom:** A normal 16:9 aspect ratio picture is enlarged vertically and horizontally in the same ratio to fill the screen.
Over Scan	**Hides the outline of the picture.** **On:** Hides the outline of the input picture. Select this setting when noise appears along the edge of the picture. **Off:** Projects the whole of the input picture. **Tip** To display the displayable region within the four directions of the screen, refer to “Blanking” on the Installation 🔧 menu (☞ page 53).

Screen Area	**Selects the size of the picture when a Hi-Vision picture is overscanned.** **Full:** Expands the picture on the whole of the screen. **Through:** Does not expands the picture on the whole of the screen. **Note** This item is effective only when a Hi-Vision signal (preset memory No. 7, 8, 9, 12, 13 and 14) is input and "On" is selected in "Over Scan".
V Center	**Adjust the whole picture by moving up and down on the screen.** As the selected number increases, the screen moves up, and as the selected number decreases, the screen moves down. **Note** This item is adjustable only when "Zoom" is selected.
Vertical Size	**Reduces or enlarges the picture vertically.** The screen is enlarged as the setting increases and reduced as the setting decreases. If the subtitle of a movie, etc. cannot be seen, use this together with "V Center". **Note** This item is adjustable only when "Zoom" is selected.
Adjust Signal	**You can adjust the input signal.** **APA:** Adjusts the position of the image signal automatically for "Phase", "Pitch", and "Shift". **Phase:** Adjusts the dot phase of the panel and the computer signal. Adjust the picture to the point where it looks clearest. **Pitch:** Adjusts the horizontal size of the picture from a computer. The higher the setting, the wider the picture. The lower the setting, the narrower the picture. Adjust the setting to match the number of dots of the input signal. **Shift:** Adjusts the position of the picture. **H:** As the setting for H (horizontal) increases, the picture moves to the right, and as the setting decreases, the picture moves to the left. Use ← / → to adjust the horizontal position. **V:** As the setting for V (vertical) increases, the picture moves up, and as the setting decreases, the picture moves down. Use ↑ / ↓ to adjust the vertical position.

Setup Menu

The Setup menu is used to change the factory preset settings, etc.

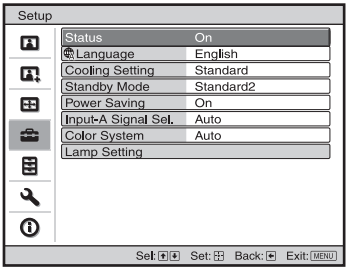

Status	**Sets whether or not the on-screen display is displayed.** Set to “Off” to turn off the on-screen displays except for the menus, message when turning off the power, and warning messages.
Language	**Selects the language used in the menu and on-screen displays.** Available languages are: English, Dutch, French, Italian, German, Spanish, Portuguese, Russian, Swedish, Norwegian, Japanese, Chinese (Simplified Chinese), Chinese (Traditional Chinese), Korean, Thai and Arabic.
Cooling Setting	**Use this item when using the projector at high altitudes.** **High:** Use this setting when using the projector at an altitude of 1,500 m or higher. **Standard:** Use this setting when using the projector at normal altitudes. **Note** When this item is set to “High”, the fan noise becomes slightly louder since the number of fan rotation increases.
Standby Mode	**Sets to lower the power consumption in standby.** **Standard1:** Sets power consumption to normal. **Standard2:** Sets the network function ineffective and reduces power consumption lower than “Standard1”. **Low:** Reduces power consumption lower than “Standard2”. **Note** When this item is set to “Low”, the HDMI Control function and the network function will not operate in standby.
Power Saving	**Sets the power saving mode.** When set to “On”, the projector goes into power saving mode if no signal is input for 10 minutes. At that time, the ON/STANDBY indicator lights in orange, then the screen becomes dark. In power saving mode, the power saving mode is cancelled if a signal is input or any button is pressed. If you do not want to set the projector to power saving mode, select “Off”.

Input-A Signal Sel.	**Selects the type of signal input from the equipment connected to the INPUT A connector.** Selects the type of signal input from the equipment by selecting "Input-A" with the INPUT button. **Auto:** Selects the input signal type automatically. **Computer:** Inputs the signal from a computer. **Video GBR:** Inputs the signal from a TV game. **Component:** Inputs the component signal from a DVD player/ recorder, Blu-ray Disc player, digital tuner, etc. **Note** When the input signal is not displayed correctly with this item set to "Auto," select the item according to the input signal.
Color System	**Selects the color system of the input signal.** **Auto:** Selects the color system of the input signal automatically from among NTSC3.58, PAL, SECAM, NTSC4.43, PAL-M, PAL-N, or PAL60. "**NTSC3.58**"–"**PAL-N**"**:** Allows you to set the color system to the selected system manually. **Note** Normally, set this to "Auto." If the picture is distorted or colorless, select the color system appropriate for the input signal.
Lamp Setting	**When replacing the lamps, set the desired lamp setting.** **(☞ page 69)**

Function Menu

The Function menu is used for changing the settings of the various functions of the projector.

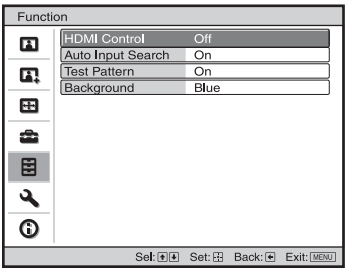

HDMI Control	**Selects the function whether to turn the HDMI Control function effective, when the HDMI 1 INPUT and HDMI 2 INPUT connectors are connected to a HDMI control compatible equipment.** **HDMI Control:** When set to “On”, the HDMI Control function is turned effective and the following settings can be assigned. **PJ→HDMI Power Sync:** When set to on “On”, the projector is powered off while the HDMI control compatible equipment connected to the projector is also powered off at the same time. **HDMI→PJ Power Sync:** When set to “On”, the HDMI control compatible equipment connected to the projector is automatically powered on or played back, etc., while the projector is also powered on at the same time. **HDMI Device List:** Lists all the HDMI control compatible equipment connected to the HDMI 1 and HDMI 2 INPUT connectors of the projector. **Notes** • When “Standby Mode” is set to “Low”, this item will not operate. • To operate the connected equipment, be sure the equipment is HDMI control compatible and assign the appropriate settings to use the HDMI Control function. For details, see “About the HDMI Control” (☞ page 59).
Auto Input Search	**Detects the input signal and displays the detected input signal automatically when the INPUT button is pressed.** When set to “On”, the projector detects whether a Component, HDMI 1, HDMI 2, Video, S-video or Input-A signal is input when the input terminal with effective signals is automatically selected by pressing INPUT. Set this to “Off” when you want to select an input selector with no input signal, or you want to switch the setting manually.

Test Pattern	**Displays the test pattern.** When set to “On,” a test pattern appears on the screen to be used when adjusting the lens with “Lens Focus,” “Lens Zoom,” and “Lens Shift,” or correcting the screen proportions with “V Keystone.” A test pattern does not appear when this item is set to “Off.” **Tip** While the test pattern is displayed, it is only displayed in green to allow you to adjust the focus easily.
Background	**Selects the background color of the screen when no signal is input.** You can select “Black” or “Blue”.

Installation Menu

The Installation menu is used for changing the installation settings.

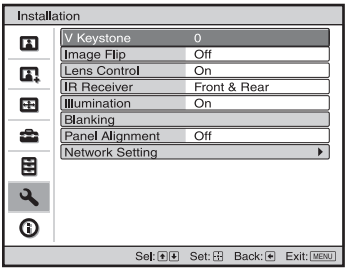

V Keystone	**Corrects the vertical trapezoidal distortion of the picture.** **When the bottom of the trapezoid is longer than the top ( ):** Sets a lower value (– direction) **When the top of the trapezoid is longer than the bottom ( ):** Sets a higher value (+ direction). **Note** Depending on the picture position adjusted with the lens shift feature, the aspect ratio of the picture may change from the original or picture distortion may occur with V Keystone adjustment.
Image Flip	**Flips the picture on the screen horizontally and/or vertically.** **Off:** The picture does not flip. **HV:** Flips the picture horizontally and vertically. **H:** Flips the picture horizontally. **V:** Flips the picture vertically. Use this item for installation for the backside projection or ceiling installation.
Lens Control	**Avoids any operation of the lens such as "Lens Focus," "Lens Zoom," and "Lens Shift," by mistake.** When set to "On," you can adjust the projection lens using "Lens Focus," "Lens Zoom," and "Lens Shift." After you make this adjustment, it is recommended that you set this item to "Off" to avoid any operation of the lens.
IR Receiver	**Selects the remote control detectors (IR Receiver) on the front and rear of the projector.** **Front & Rear:** Activates both the front and rear detectors. **Front:** Activates the front detector only. **Rear:** Activates the rear detector only.
Illumination	**Selects whether the illumination on the top panel of the projector lights when the projector is on.** Turns on the illumination on the top panel of the projector, when set to "On." It turns off when set to "Off."

Blanking	**This feature allows you to adjust the displayable region within the four directions of the screen.** Select each screen edge “left / right / top / bottom” on the Blanking adjustment screen with ↑ / ↓ buttons. Adjust the desired Blanking value with ← / → button. 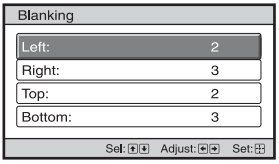 **Note** When both the “Blanking” and the “V Keystone” are adjusted at the same time, the “Blanking” cannot be adjusted correctly. When using the “Blanking”, make sure that you set the “V Keystone” to “0”.
Panel Alignment	**This feature allows you to adjust the gaps in the color of characters or the picture.** When set to “On”, the “Adjust Color” and the “Pattern Color” can be assigned and adjusted. **Adjust Items:** Selects how to make adjustments from below. **Shift:** Shifts the whole picture and makes adjustments. **Zone:** Selects the desired range and makes adjustments. **Adjust Color:** Assigns the desired color to adjust the gaps in color. Select “R” (Red) or “B” (Blue) to make adjustments based on “G” (Green). **Pattern Color:** Select “R/G” (Red and Green) or “R/G/B” (White, all colors) when the “Adjust Color” is “R” (Red). Select “B/G” (Blue and Green) or “R/G/B” (White, all colors) when the “Adjust Color” is “B” (Blue). **Adjust:** The shift adjustment and zone adjustment of the color selected in “Adjust Color” can be made with ← / →, ↑ / ↓ buttons. **When “Shift” is selected:** Assign the settings of the horizontal direction (H) with ← / → buttons and the vertical direction (V) with ↑ / ↓ buttons on the shift adjustment screen. 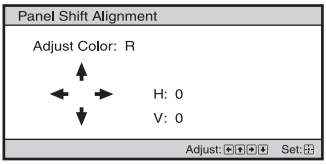 **When “Zone” is selected:** Select the position to adjust with ← / → buttons for the horizontal position (H position) and ↑ / ↓ buttons for the vertical position (V position), then press ⊕. 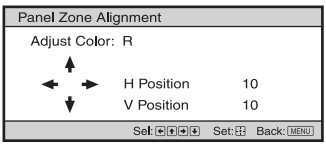

	Set the amount to adjust with ← / → buttons for the horizontal direction (H direction) and with ↑ / ↓ buttons for the vertical direction (V direction). You can select the position to adjust again by pressing ⊕. 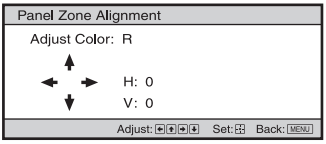 **Reset:** Returns to the factory settings. **Note** Depending on the adjustments made above, colors may become uneven or the resolution may change.
Network Setting	**You can set internet protocols such as IP address, Subnet Mask, Default Gateway, and DNS Server when accessing the projector from a computer or using "ImageDirector3"application supplied.** **IP Address Setup** Selects either "Auto (DHCP)" or "Manual." When you select "Manual," set the following "IP Address," "Subnet Mask," and "Default Gateway." **IP Address** Sets the IP Address of the projector. (1.0.0.0 to 223.255.255.255) **Subnet Mask** Sets the Subnet Mask of the projector. (1.0.0.0 to 255.255.255.255) **Default Gateway** Sets the Default Gateway of the projector. (1.0.0.0 to 223.255.255.255) **Primary DNS** Sets the DNS server to be used as a priority. (1.0.0.0 to 223.255.255.255) **Secondary DNS** Sets the alternative DNS server. (1.0.0.0 to 223.255.255.255) **MAC Address** Displays MAC address of the projector. You cannot change.

Information Menu

The Information menu displays the model name, serial number, the horizontal and vertical frequencies of the input signal and the cumulated hours of usage of the lamp.

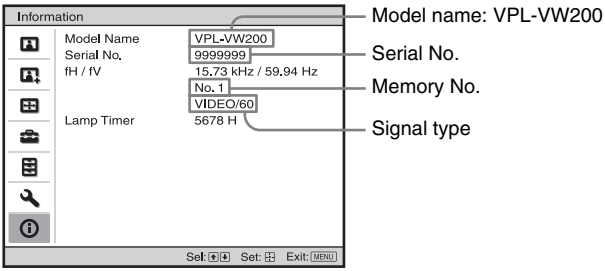

Model Name	Displays the model name (VPL-VW200).
Serial No.	Displays the serial number.
fH (horizontal frequency)	Displays the horizontal frequency of the input signal.
fV (vertical frequency)	Displays the vertical frequency of the input signal.
Memory No.	Displays the preset memory number of the input signal.
Signal type	Displays the type of the input signal.
Lamp Timer	Indicates how long the lamp has been turned on (total usage).

Notes

- fH (horizontal frequency) and fV (vertical frequency) may not be displayed depending on the equipment connected to the projector.
- You cannot change the displays listed above.

About the Preset Memory No.

This projector has 38 types of preset data for input signals (the preset memory). When the preset signal is input, the projector automatically detects the signal type and recalls the data for the signal from the preset memory to adjust it to an optimum picture. The memory number and signal type of that signal are displayed in the Information menu.
You can also adjust the preset data through the Screen menu.
This projector also contains 20 different user memories beside the preset memories used for inputting computer signals. You can save input signals that have not been preset on these user memories.
When an unpreset signal is input for the first time, a memory number is displayed as 0.
When you adjust the data of the signal in the Screen menu, it will be registered to the projector. If more than 20 user memories are registered, the newest memory always overwrites the oldest one.
See the chart on page 73 to find if the signal is registered to the preset memory.

Note

When the aspect ratio of input signal does not match the screen size, a part of the screen is displayed in black.

Operating the Projector from a Computer

Accessing the Projector from a Computer

You can check the present status of the projector on a computer display and control the projector from a computer.
Confirm that the projector and computer are connected to the router/hub with the LAN cables, then turn on the projector, computer and router/hub.

1 Start Internet Explorer 5.0 (or later version) on your computer.

2 Type "http://xxx.xxx.xxx.xxx (the IP address of the projector)" as the "Address," then press the ENTER key on a keyboard.

You can check the IP address of the projector using the Installation menu. (☞ page 54)

Enter the IP address here.

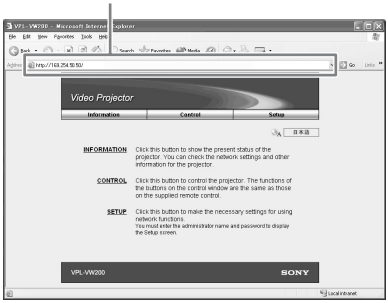

Tip

When "Standby Mode" in Setup setting is set to "Standard1", you can access the projector from a computer even if the projector is in standby mode.

Checking the Status of the Projector

Click "Information." You can check the information and present status of the projector on a computer display. You can check the information and status in the window, but you cannot change the setting.

Information

The present status of the projector is displayed.

Note

fH (horizontal frequency) and fV (vertical frequency) may not be displayed appropriately, depending on the equipment connected to the projector.

Menu

The present settings of the projector are displayed.

Operating the Projector

Click “Control.” You can perform various adjustments and settings of the projector on a computer display.
The functions of the buttons in the windows are the same as those on the remote control supplied with the projector.

Settings of the projector are lit.
After you have changed the settings on the projector, click “Refresh” at the upper right-hand corner of the window to update the status. The lighting buttons are changed.

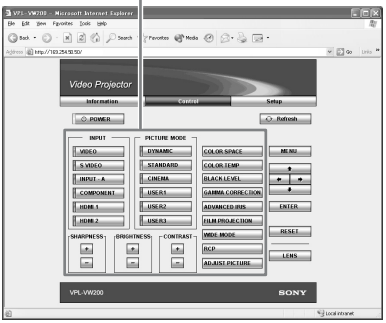

Setting the Information

Click “Setup.” The Password Properties dialog box appears. The name of the “User” account is preset without a password to “root” at the factory. You can set the owner information, etc. Click “Apply” at the lower part of each window to update the projector to the data input in each window.

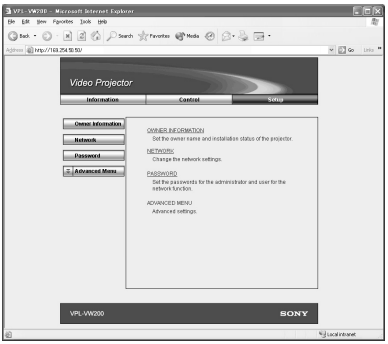

Owner and projector information

Click “OWNER INFORMATION.”

Owner

Enter owner information.

Projector

Enter the location of the projector.

Memo

Enter a memo, if required.

Network settings

Click “NETWORK.”

Internet Protocol (TCP/IP)

Normally, set “Obtain an IP address automatically (DHCP).” If you select “Specify an IP address,” set the necessary items.

Setting passwords for "Administrator" and "User"

Click "Password." You can set passwords for each "Administrator" and "User." The name of the "Administrator" account is preset to "root" at the factory. It cannot be changed.

Advanced setting

Click "ADVANCED MENU" to display the Advertisement button, PJ Talk button, SNMP button and Reset button. These settings are mainly for professional use. Detailed information on Advertisement button and PJ Talk button are indicated by the PROTOCOL manual. For details on each function of "Advanced setting", consult with your local dealer or qualified Sony personnel.

To reset the setting

Click the Reset button displayed in "Advanced setting". The data set in "Setup" are reset to its factory preset value.

Notes

- The data input will be recorded in the memory of the projector.
- These data may become a personal information, depending on the content input. Therefore, it is recommended that you input content that cannot specify particular individuals.
- These data may be sent out through the network by "Advertisement", "PJTalk" and "SNMP" functions.
- On disposal or transfer of the projector, it is strongly recommended that you delete the data recorded in the memory of the projector. On how to delete the data, see "To reset the setting".

Others

This section describes about the other functions, how to solve the problems, how to replace the lamp and air filter, etc.

About the HDMI Control

What is the HDMI Control?

HDMI Control is an HDMI standard mutual control function which uses the HDMI CEC (Consumer Electronics Control) specification. By connecting a variety of HDMI control compatible equipment such as a DVD recorder, an AV amplifier, etc., with an HDMI cable, you can operate your equipment synchronizing with the HDMI control compatible equipment connected to the equipment. When using the HDMI Control function, be sure to assign the appropriate connection and settings.

Connecting a HDMI control compatible equipment

Connect the projector with an HDMI control compatible equipment using an HDMI cable. Be sure to use a cable that has acquired the HDMI logo for your connection.

Note

The HDMI Control function is available only between Sony HDMI control compatible equipment.

Setting the HDMI Control

Be sure to assign the appropriate connections for both the projector and the HDMI control compatible equipment connected to the projector. For settings of the projector, see ☞ page 50. For settings of the HDMI equipment connected to the projector, refer to its operational instructions.

What you can do with the HDMI Control

- System Standby
  You can power off the projector and the HDMI control compatible equipment connected to the projector at the same time.
- One Touch Play
  When the HDMI control compatible equipment connected to the projector is played back, the projector is also automatically powered on, and its input setting is synchronized at the same time.

Notes

- To operate the connected equipment, be sure the equipment is HDMI control compatible and assign the appropriate settings to use the HDMI Control function.
- Depending on the connected equipment, the HDMI Control function may not work appropriately. For the settings of the connected equipment, refer to the operating instructions of the equipment.

About the x.v.Color

- x.v.Color is a more familiar term for the xvYCC standard proposed by Sony, and is a trademark of Sony.
- xvYCC is an international standard for color space in video. This standard can express a wider color range than the currently used broadcast standard.

Troubleshooting

If the projector appears to be operating erratically, try to diagnose and correct the problem using the following instructions. If the problem persists, consult with qualified Sony personnel.

Power

Symptom	Cause and Remedy
The power is not turned on.	→ After about one minute, turn the power on. → Close the lamp cover securely, then tighten the screws securely. (☞ page 67) → Close the filter holder securely. (☞ page 69) → Check warning indicators. (☞ page 62)

Picture

Symptom	Cause and Remedy
No picture.	→ Check that the proper connections have been made. (☞ page 18) → Select the input source correctly using the INPUT button. (☞ page 28) → Set the computer signal to output from an external monitor. → Set the computer signal to output only to an external monitor. → Select "Computer," "Component" or "Video GBR" for "Input-A Signal Sel." on the Setup menu according to the input signal. (☞ page 49)
The picture from the INPUT A connector is colored strange.	→ Select "Computer," "Component" or "Video GBR" for "Input-A Signal Sel." on the Setup menu according to the input signal. (☞ page 49)
The picture from the VIDEO INPUT or S VIDEO INPUT connector is colored strange.	→ Adjust the picture of the Picture menu. (☞ page 41) → Set "Color System" in the Setup menu to match the color system being input. (☞ page 49)
The color gradation of the dark area or the bright area of the picture from the HDMI 1 or HDMI 2 connector becomes unclear.	→ The color gradation of the dark area or the bright area may become unclear when a signal other than those from HDMI standard is input. Adjust the "Brightness" and the "Contrast" in the Picture menu. (☞ page 42)
The picture is too dark.	→ Adjust the "Contrast" or "Brightness" of the Picture menu properly. (☞ page 42)
The picture is not clear.	→ Adjust the focus. (☞ page 25) → Condensation has accumulated on the lens. Leave the projector for about two hours with the power on.

Symptom	Cause and Remedy
The picture flickers.	→ Activate “APA”, then adjust the current input signal. → Adjust “Phase” for “Adjust Signal” in the Screen menu properly. (☞ page 47)
The color of characters or the picture is not appropriate.	→ Select the desired color registration in “Panel Alignment” of Installation menu (☞ page 53).

On-screen display

Symptom	Cause and Remedy
On-screen display does not appear.	→ Set “Status” in the Setup menu to “On.” (☞ page 48) → Check if the I/⏻ (ON/STANDBY) indicator should light in green.
The model name does not disappear from the screen.	→ The display mode of the projector may be set at the time of purchase. Consult with your local dealer or qualified Sony personnel.

Remote control

Symptom	Cause and Remedy
The remote control does not work.	→ Batteries could be weak. Replace them with new batteries. (☞ page 11) → Insert the batteries with the correct polarities. (☞ page 11) → In the Installation menu, set the setting of “IR Receiver” to “Front & Rear”. (☞ page 52) → If there is a fluorescent lamp near the remote control detector, the projector may work improperly or inadvertently. Change the setting of “IR Receiver” in the Installation menu. (☞ page 52)

Others

Symptom	Cause and Remedy
The fan is noisy.	→ Check the setting of “Cooling Setting” in the Setup menu. (☞ page 48) → Make sure that the room temperature is not too high. → Check the installation conditions. (☞ page 12) The number of fan rotation increases to maintain the product reliability of the projector’s components in a room, where the temperature is higher than normal. The fan noise becomes slightly louder. The approximate normal temperature is 25°C.
Image is left on the screen. (image retention)	→ When High contrast non-moving images are displayed for a long period of time, there may be some image retention on the screen. This is only a temporary condition. Turning off the power for a while will eliminate the retained image.

Warning Indicators

The ON/STANDBY or LAMP/COVER indicator lights up or flashes if there is any trouble with your projector.

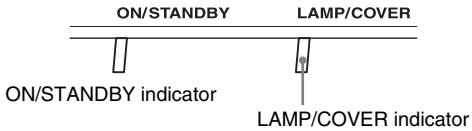

Symptom	Cause and Remedy
LAMP/COVER flashes in red. (A repetition rate of 2 flashes)	➔ Close the lamp cover securely, then tighten the screws securely. (☞ page 67) ➔ Close the filter holder securely. (☞ page 69)
LAMP/COVER flashes in red. (A repetition rate of 3 flashes)	➔ The lamp has reached the end of its useful lifespan. Replace the lamp. (☞ page 65) ➔ The lamp has reached a high temperature. Wait until the lamp cools, and then turn on the power again.
ON/STANDBY flashes in red. (A repetition rate of 4 flashes)	➔ The fan is broken. Consult with qualified Sony personnel.
ON/STANDBY flashes in red. (A repetition rate of 2 flashes)	➔ The internal temperature is unusually high. Check to ensure that if nothing is blocking the ventilation holes or whether or not the projector is being used at high altitudes.
ON/STANDBY flashes in red. (A repetition rate of 6 flashes)	➔ Press the I/⏻ (ON/STANDBY) switch to turn on the projector. If the power is not turned on, disconnect the AC power cord, then confirm the ON/STANDBY lamp is turned off. After about 10 seconds, reconnect the AC power cord and turn on the power again. If the indicators still light up, the electrical system has a problem. Consult with qualified Sony personnel.

Note

When a warning indicator other than the above starts flashing, and the symptom persists even after carrying out the above methods, consult with qualified Sony personnel.

Message Lists

Warning messages

Message	Cause and Remedy
High temp.! Lamp off in 1 min.	→ Turn off the power. → Check to ensure that nothing is blocking the ventilation holes. (☞ page 13)
Frequency is out of range!	→ Frequency is out of range. Input a signal that is within the acceptable frequency range of the projector.
Please check Input-A Signal Sel.	→ Set "Input-A Signal Sel." in the Setup menu to "Computer" when an RGB signal is input from a computer. (☞ page 49)
Please replace the Lamp/ Filter. Lamp/Filter life remains less than 50H.	→ The remaining available usage time for the lamp and the air filter is short. (Estimated approximately 50 hours.) **Note** To clear the message on the screen, press any key on the remote control or the control panel of the projector once.
Please replace the Lamp/ Filter. Lamp/Filter life remains less than 15H.	→ The remaining available usage time for the lamp and the air filter is short. (Estimated approximately 15 hours.) **Note** To clear the message on the screen, press any key on the remote control or the control panel of the projector once.
Please replace the Lamp/ Filter. End of Lamp/Filter life. Lamp off in 1 min.	→ It is time to replace the lamp. Replace the lamp. (☞ page 65) → Also, replace the air filter too. (☞ page 65) If the message appears again after you replace the lamp and the air filter, the lamp replacement process is not complete. Check the lamp replacement process. (☞ page 65)
Please clean the filter.	→ It is time to clean the air filter. Clean the air filter. (☞ page 70) **Note** To clear the message on the screen, press any key on the remote control or the control panel of the projector once.
Please clean the filter. Have you finished? Yes No	→ It is time to clean the air filter. Clean the air filter. (☞ page 70) → If you cleaned the air filter, select "Yes." If you did not clean the air filter, select "No."
Projector temperature is high. Cooling Setting should be "High" if projector is being used at high altitude.	→ Check to ensure that the Ventilation holes on the unit are not covered. (☞ page 13) → When using the projector at high altitude, set the Cooling Setting to "High". (☞ page 48) **Note** When temperature inside the projector remains high, the Cooling Setting is switched to "High" in one minute, then the fan speed increases.

Caution messages

Message	Cause and Remedy
x→	➔ No signal is input in the selected input. Check connections. (☞ page 18)
Not applicable!	➔ Press the appropriate button. ➔ The operation to be activated by the button is currently prohibited.

Replacing the Lamp and the Air Filter and cleaning the Ventilation holes (intake)

Tools you need to get started:
Standard Phillips screwdriver
Cloth (for scratch protection)

The lamp used for the light source has a certain lifespan. When the lamp dims, the color balance of the picture becomes strange, or "Please replace the Lamp/Filter. End of Lamp/Filter life. Lamp off in 1 min." appears on the screen, the lamp may be exhausted. Replace the lamp with a new one (not supplied) without delay.
Use an LMP-H400 Projector Lamp as the replacement lamp.
The air filter is supplied with the LMP-H400 Projector Lamp. When you replace the lamp, it is also time to replace the air filter. Whenever you replace the lamp, be sure to replace the air filter with a new one. Also clean the ventilation holes (intake).

Caution

- The lamp remains hot after the projector is turned off with the I/⏻ (ON/STANDBY) switch. If you touch the lamp, you may burn your fingers. When you replace the lamp, wait for at least an hour for the lamp to cool.
- Do not touch the surface of the lens. If you touch it, wipe off the fingerprints with a soft cloth.
- Pay special attention to replacing the lamp when the projector is installed on the ceiling.
- When removing the lamp unit, make sure it remains horizontal, then pull straight up. Do not tilt the lamp unit. If you pull out the lamp unit while tilted and if the lamp breaks, the pieces may scatter, causing injury.
- When you remove the air filter, be careful not to let any dust fall into the projector.
- Replacing the air filter is crucial to maintain the good performance of the projector or to prevent malfunction to it. When a warning message for replacing the air filter appears, replace the air filter immediately.

1 Turn off the projector and unplug the AC power cord.

2 When setting the projector on a flat surface such as a desk etc., put a cloth to prevent the surface from being scratched. Reverse the projector as illustrated, then place it on the cloth.

Note

Be sure that the projector is placed on a stable surface.

3 While holding up the cover release lever on the right, slide the top cover until it stops.

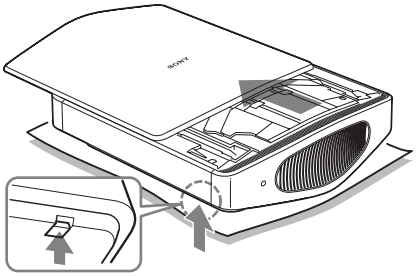

Cover release lever

4 Loosen the screw on the lamp cover with a Philips screwdriver, and then open the lamp cover.

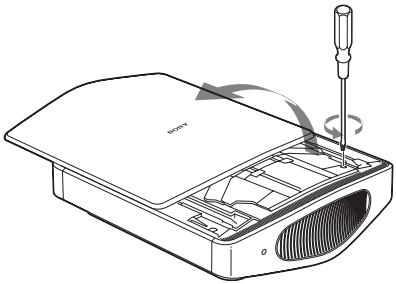

Note

Be sure to use a Philips screwdriver with a shaft length of 130 mm (5 1/8 inches) or more when replacing a projector lamp.

5 Remove the valve cap (①), then turn the gas releasing valve clockwise, using a Philips screwdriver (②).

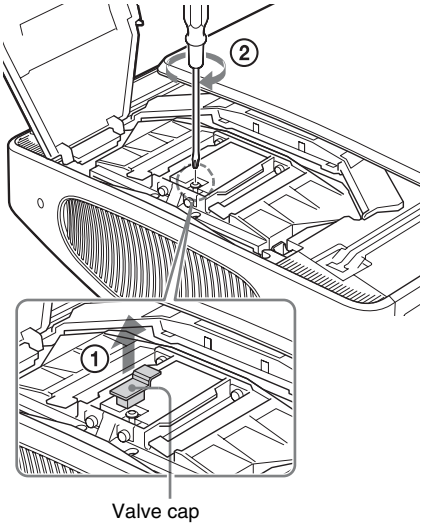

Note

Turn the gas releasing valve clockwise until a hissing sound comes out from the valve. After this hissing sound stops, go to the next step.
Xenon gas is encapsulated under high pressure inside of the lamp. This xenon gas is odorless and harmless. However, if you drop the lamp or strike it without releasing gas, the lamp may burst. This may result in an injury.

6 Loosen the four screws on the lamp unit with a Philips screwdriver.

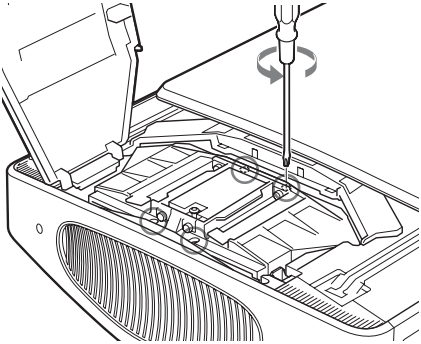

7 Hold the lamp unit with your hand, and then, pushing the lamp release lever toward the arrow direction (toward the right), pull the lamp unit straight out.

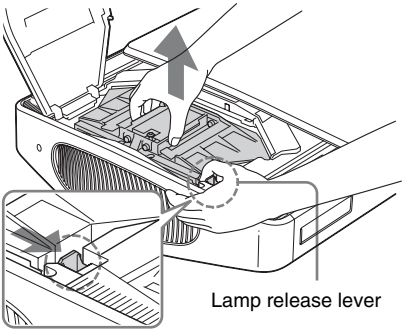

Note

Hold the lamp unit tightly so that you do not drop it, because it is heavy (approx. 2.9 kg (6 lb 6 oz)). Dropping the lamp may result in an injury or a breakdown of the projector.

8 Insert the new lamp unit straight in all the way until it is securely in place and you hear it click.

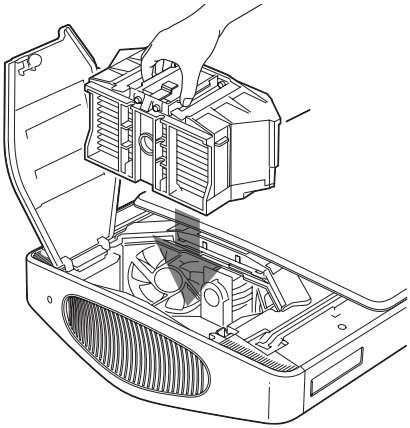

Notes

- Insert the new lamp unit while holding it tightly, because it is heavy (approx. 2.9 kg (6 lb 6 oz)). Dropping the lamp may result in an injury.
- Be careful not to touch the fan or optical block inside the unit.
- Confirm that the lamp release lever has returned to its original position. If not, the projector will not turn on.

9 Tighten the four screws loosened in step 6 to secure the lamp unit to the projector.

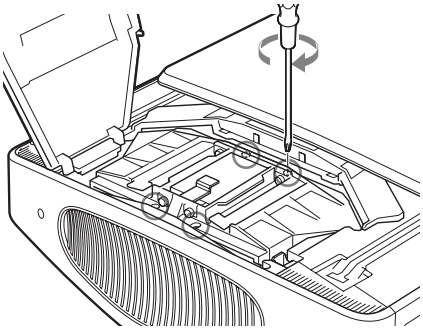

10 Tighten the screw loosened in step 4 to close the lamp cover.

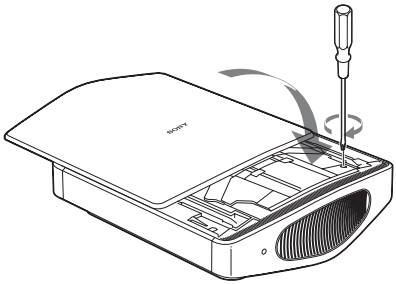

11 Close the top cover.

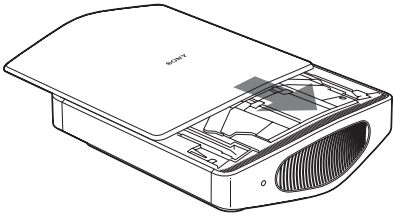

12 Reverse the projector, then place it on the cloth.

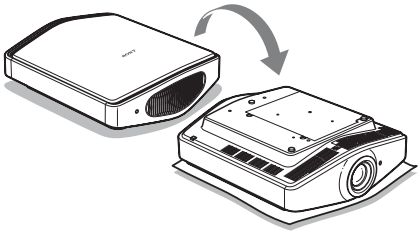

Note

Be sure that the projector is placed on a stable surface.

13 Remove the filter holder.

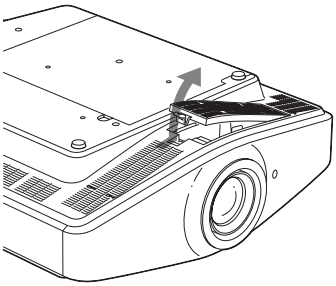

When the air filter cover (supplied) has been attached because the projector is installed on the ceiling, remove this air filter cover before removing the filter holder.
For detailed information on the dust protector, see “Ceiling Installation” (☞ page 78).

14 Remove the air filter.

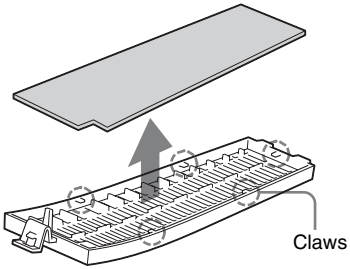

15 Attach the new air filter so that it fits into the each claws (5 positions) on the filter holder.

Note

Attach the Air Filter aligning it with the shape of the filter holder.
Also, do not touch the fan after removing the air filter that is set deep inside the projector.

16 Attach the filter holder.

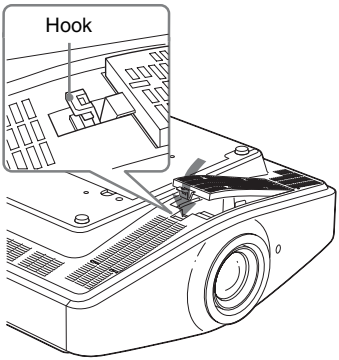

Note

Attach the filter holder securely by pressing on the hook until a click is heard. The projector will not turn on unless the filter holder is securely closed.

17 Be careful not to let dust near the Ventilation holes (intake) go inside the inner part of the projector when cleaning.

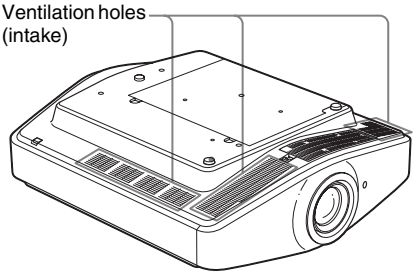

18 Place the project back on its original position.

19 Turn on the projector, then select the desired setting item on the Setup menu. The menu screen below will be appeared.

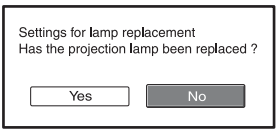

20 Select "Yes".

Caution

Do not put your hands into the lamp replacement slot, and do not allow any liquid or other objects into the slot to avoid electrical shock or fire.

Notes

- Be sure to use an LMP-H400 Projector Lamp for replacement. If you use lamps other than the LMP-H400, the projector may malfunction.
- Be sure to turn off the projector and unplug the power cord before replacing the lamp, then check the ON/STANDBY lamp has already been turned off.
- The projector will not turn on unless the lamp is securely installed in place.
- The projector will not turn on unless the lamp cover are securely closed.
- To cancel a message displayed on the screen, press either the button on the remote control or the one on the control panel on the projector.

Note

The disposal rules for used fluorescent tubes depend on where you live. Follow the waste disposal policy in your area.

Cleaning the Air Filter

When “Please clean the filter.” appears on the screen, you should clean the air filter. The air filter should be cleaned every 1,250 hours. This value varies depending on the environment or how the projector is used. 1,250 hours are approximate.
Clean the air filter with a vacuum cleaner. If the dust still remains, wash the air filter with a mild detergent solution and dry it in a shaded place.

Notes

- Be careful that the filter does not get caught in the vacuum cleaner.
- When you clean the air filter, make sure you do not damage it.
  For details on how to attach and remove the air filter, see “Replacing the Lamp and the Air Filter and cleaning the Ventilation holes (intake)” Steps 13 to 16. (☞ page 68)
- When you remove the air filter, be careful not to let any dust fall into the projector.
- Cleaning the air filter is crucial to maintain the good performance of the projector or to prevent malfunction to it. When a warning message for cleaning the air filter appears, clean the air filter immediately.

Cleaning and the Screen of the Projector

Cleaning the lens

The lens surface is especially treated to reduce reflection of light.
As incorrect maintenance may impair the performance of the projector, take care with respect to the following:

- Wipe the lens gently with a soft cloth such as a cleaning cloth or glass cleaning cloth.
- Stubborn stains may be removed with a soft cloth such as a cleaning cloth or glass cleaning cloth lightly dampened with water.
- Never use solvent such as alcohol, benzene or thinner, or acid, alkaline or abrasive detergent, or chemical cleaning cloth, as they will damage the lens surface.

Cleaning the cabinet

- To remove dust from the cabinet, wipe gently with a soft cloth. If dust is persistent, wipe with a soft cloth slightly moistened with a diluted mild detergent solution.
- Never use any type of abrasive pad, alkaline/acid cleaner, scouring powder, or volatile solvent, such as alcohol, benzene, thinner or insecticide.
- Using such materials or maintaining prolonged contact with rubber or vinyl materials may result in damage to the screen surface and cabinet material.

Black points and bright points (red, blue, or green) on the screen

The projector is manufactured using high-precision technology.
You may, however, see tiny black points and/or bright points (red, blue, or green) that continuously appear on the projector.
This is a normal result of the manufacturing process and does not indicate a malfunction.

Specifications

System

Projection system
SXRD panel, 1 lens, projection system

LCD panel 0.61-inch (15.4 mm) SXRD panel 6,220,800 pixels (2,073,600 pixels × 3)

Lens 1.8 times zoom lens (motorized) f=18.7 mm to 33.7 mm/F2.54 to F3.53

Lamp 400W Xenon Lamp

Projection picture size
40 inches to 300 inches (1,016 mm to 7,620 mm) (measured diagonally)

Color system NTSC3.58/PAL/SECAM/NTSC4.43/PAL-M/PAL-N/PAL60 system, switched automatically/manually (PAL60 system not switched manually)

Acceptable video signals
15 kHz RGB/component 50/60 Hz, Progressive component 50/60 Hz, DTV (480/60i, 576/50i, 480/60p, 576/50p, 720/60p, 720/50p, 1080/60i, 1080/50i, 1080/48i), 1080/60p (HDMI input only), 1080/50p (HDMI input only), 1080/24p (HDMI input only), Composite video, Y/C video

Acceptable computer signals
fH: 19 kHz to 72 kHz
fV: 48 Hz to 92 Hz
Maximum resolution 1920× 1080 (HDMI input only)
For details, see "Preset Signals" (☞ page 73)

Input

Video input VIDEO: phono type
Composite video: 1 Vp-p±2 dB sync negative (75 ohms terminated)
S VIDEO: Y/C mini DIN 4-pin type
Y (luminance): 1 Vp-p±2 dB sync negative (75 ohms terminated)
C (chrominance): burst 0.286 Vp-p ±2 dB (NTSC) (75 ohms terminated), or burst 0.3 Vp-p±2 dB (PAL) (75 ohms terminated)

Y PB/CB PR/CR
Component: phono type
Y with Sync: 1 Vp-p±2dB sync negative (75 ohms terminated)
PB/CB: 0.7 Vp-p±2dB (75 ohms terminated)
PR/CR: 0.7 Vp-p±2 dB (75 ohms terminated)

HDMI Digital RGB/Y CB (PB) CR (PR)

INPUT A HD D-sub 15-pins
Analog RGB/component:
R/CR (PR): 0.7 Vp-p±2 dB (75 ohms terminated)
G: 0.7 Vp-p±2 dB (75 ohms terminated)
G with sync/Y: 1 Vp-p±2 dB sync negative (75 ohms terminated)
B/CB (PB): 0.7 Vp-p±2 dB (75 ohms terminated)
SYNC/HD: Composite sync input: TTL level, positive/negative
Horizontal sync input: TTL level, positive/negative
VD: Vertical sync input: TTL level, positive/negative

TRIGGER Minijack
Power on: DC 12 V, output impedance: 4.7 kilohms
Power off: 0 V

REMOTE RS-232C: D-sub 9-pins (female)

NETWORK RJ-45
10BASE-T/100BASETX

General

Dimensions 496 mm × 175 mm × 574 mm ($19\ ^5/_8 \times 7 \times 22\ ^5/_8$ inches) (w/h/d)

Mass Approx. 20 kg (44 lb 2 oz)

Power requirements
AC 100 V to 240 V, 2.7 A to 6.5 A, 50/60 Hz

Power consumption
Max. 650 W
Standby mode: 10 W
Standby mode (low): 0.5 W

Operating temperature
5°C to 35°C (41°F to 95°F)

Operating humidity
35% to 85% (no condensation)

Storage temperature
–20°C to +60°C (–4°F to +140°F)

Storage humidity
10% to 90%

Supplied accessories

Remote control RM-PJVW200 (1)
Size AA (R6) batteries (2)
AC power cord (1)
Plug holder (1)
Lens Cap (1)
Operating Instructions (1)
CD-ROM (ImageDirector3) (1)
Air Filter Cover (1)

Design and specifications are subject to change without notice.

Optional accessories

Projector Lamp LMP-H400 (for replacement)
Projector Suspension Support PSS-H10

Warning on power connection

Use a proper power cord for your local power supply.

	The United States, Canada	Continental Europe	UK, Ireland, Australia, New Zealand	Japan	China
Plug type	YP-3	YP-12A	*	YP-359	VM0722
Female end	YC-13	YC-13D	VM0303B	YC-13	VM0724
Cord type	SVT	H05VV-F	CEE (13) 53 rd (OC)	VCTF	227 IEC 53 (RVV)
Rated Voltage & Current	10A/125V	10A/250V	10A/250V	12A/125V	10A/250V
Safety approval	UL/CSA	VDE	VDE	DENANHO	CCC

* Use a rated plug that complies with the regulation of each country/region and the specifications.

Preset Signals

The following table shows the signals and video formats which you can project using this unit.
When a signal other than the preset signal shown below is input, the picture may not be displayed properly.

Memory No.	Preset signal (resolution)		fH (kHz)	fV (Hz)	Sync	H Size
1	VIDEO/60	60 Hz	15.734	59.940	–	–
2	VIDEO/50	50 Hz	15.625	50.000	–	–
3	480/60i	DTV 480/60i (720 × 480i)	15.734	59.940	SonG/Y or composite sync	–
4	576/50i	DTV 576/50i (720 × 576i)	15.625	50.000	SonG/Y or composite sync/composite video	–
5	480/60p	480/60p (720 × 480p) (Progressive NTSC)	31.470	60.000	SonG/Y	–
6	576/50p	576/50p (720 × 576p) (Progressive PAL)	31.250	50.000	SonG/Y	–
7	1080/60i	1035/60i (1920 × 1035i), 1080/60i (1920 × 1080i)	33.750	60.000	SonG/Y	–
8	1080/50i	1080/50i (1920 × 1080i)	28.130	50.000	SonG/Y	–

Memory No.	Preset signal (resolution)		fH (kHz)	fV (Hz)	Sync	H Size
9	1080/24PsF	1080/48i (1920 × 1080i)	27.000	48.000	SonG/Y	–
10	720/60p	720/60p (1280 × 720p)	45.000	60.000	SonG/Y	–
11	720/50p	720/50p (1280 × 720p)	37.500	50.000	SonG/Y	–
12	1080/60p	1080/60p (1920 × 1080p)	67.500	60.000	–	–
13	1080/50p	1080/50p (1920 × 1080p)	56.260	50.000	–	–
14	1080/24p	1080/24p (1920 × 1080p)	26.973	23.976	–	–
21	640 × 350	VGA-1 (VGA350)	31.469	70.086	H-pos, V-neg	800
22		VESA 85 (VGA350)	37.861	85.080	H-pos, V-neg	832
23	640 × 400	NEC PC98	24.823	56.416	H-neg V-neg	848
24		VGA-2 (TEXT)/ VESA70	31.469	70.086	H-neg V-pos	800
25		VESA 85 (VGA400)	37.861	85.080	H-neg, V-pos	832
26	640 × 480	VESA 60	31.469	59.940	H-neg, V-neg	800
27		Mac 13	35.000	66.667	H-neg, V-neg	864
28		VESA 72	37.861	72.809	H-neg, V-neg	832
29		VESA 75 (IBM M3)	37.500	75.000	H-neg, V-neg	840
30		VESA 85 (IBM M4)	43.269	85.008	H-neg, V-neg	832
31	800 × 600	VESA 56	35.156	56.250	H-pos, V-pos	1024
32		VESA 60	37.879	60.317	H-pos, V-pos	1056
33		VESA 72	48.077	72.188	H-pos, V-pos	1040
34		VESA 75 (IBM M5)	46.875	75.000	H-pos, V-pos	1056
35		VESA 85	53.674	85.061	H-pos, V-pos	1048
36	832 × 624	Mac 16	49.724	74.550	H-neg, V-neg	1152
37	1024 × 768	VESA 60	48.363	60.004	H-neg, V-neg	1344
38		VESA 70	56.476	70.069	H-neg, V-neg	1328
39		VESA 75	60.023	75.029	H-pos, V-pos	1312
45	1280 × 960	VESA 60	60.000	60.000	H-pos, V-pos	1800
47	1280 × 1024	VESA 60	63.974	60.013	H-pos, V-pos	1696

Memory No.	Preset signal (resolution)		fH (kHz)	fV (Hz)	Sync	H Size
50	1400 × 1050	SXGA +	65.317	59.978	H-neg, V-pos	1864
55	1280 × 768	1280 × 768/60	47.776	59.870	H-neg, V-pos	1664
56	1280 × 720	1280 × 720/60	44.772	59.855	H-neg, V-pos	1664

Preset memory numbers for each input signal

Analog signal

Signal	Preset memory number
Video signal (VIDEO INPUT and S VIDEO INPUT connectors)	1, 2
Component signal (INPUT A and Y PB/CB PR/CR connectors)	3 to 11
Video GBR signal (INPUT A connector)	3 to 11
Computer signal (INPUT A connector)	21 to 39, 55 to 56

Digital signal

Signal	Preset memory number
Component signal (HDMI 1, 2 connectors)	3 to 8, 10 to 14
Video GBR signal (HDMI 1, 2 connectors)	3 to 8, 10 to 14
Computer signal (HDMI 1, 2 connectors)	10 to 13*, 26, 32, 36, 37, 45, 47, 50, 55

* Some digital signals input from computers may be displayed as preset memory number of DTV signal (Component or Video GBR signal).

Input Signals and Adjustable/Setting Items

The items in the menus available to adjust differ depending on the input signal. The following tables indicate them.
The items that cannot be adjusted are not displayed in the menu.

Item	Input signal			
	Video signal	Component signal	Video GBR signal	PC signal
Advanced Iris	●	●	●	●
Film Projection	●	●	●	–
Motion Enhancer	●	●	●	–
Contrast	●	●	●	●
Brightness	●	●	●	●
Color	● (except for B & W)	●	●	–
Hue	● (NTSC3.58/ NTSC4.43 only, except for B & W)	●	●	–
Color Temp.	●	●	●	●
Sharpness	●	●	●	–
NR	●	● (preset memory numbers 3, 4, 7, 8, 9 only)	● (preset memory numbers 3, 4, 7, 8, 9 only)	–
DRC Mode	●	● (excluding preset memory numbers 12, 13, 14)	● (excluding preset memory numbers 12, 13, 14)	–
Film Mode	●	● (excluding preset memory number 14)	● (excluding preset memory number 14)	–
Black Level Adj.	●	●	●	–
Gamma Correction	●	●	●	●
x.v.Color	●	●	–	–
RCP	●	●	●	●
Color Space	●	●	●	●

● : Adjustable/can be set
– : Not adjustable/cannot be set

Screen menu

Item	Input signal			
	Video signal	Component signal	Video GBR signal	PC signal
Wide Mode	●	●	●	● *2
Over Scan	–	●	●	–
Screen Area *1	–	● (preset memory numbers 7, 8, 9, 12, 13, 14 only)	● (preset memory numbers 7, 8, 9, 12, 13, 14 only)	–
V Center *3	●	●	●	●
Vertical Size *3	●	●	●	–
APA	–	–	–	● *4
Phase	–	–	–	● *4
Pitch	–	–	–	● *4
Shift	–	●	●	●

● : Adjustable/can be set
– : Not adjustable/cannot be set
*1: This item is effective only when "Over Scan" is set to "On" in the Screen menu.
*2: If the input signal is from a computer, the setting cannot be made when the aspect ratio is 16:9 or wider.
*3: The setting can be made only when "Zoom" is selected in "Wide Mode".
*4: The setting can be made only for analog signal.

Note

When connecting a cable such as an HDMI cable, etc., check the type of the signal in the Information Menu (☞ page 55) and Digital signal (☞ page 75), and check items that are adjustable/can be set.

Ceiling Installation

Use the PSS-H10 Projector Suspension Support when you install the projector on a ceiling. The projection distances for ceiling installation are shown below. Also, attach the supplied air filter cover for the ventilation holes (intake) to prevent the air filter from becoming clogged with dust.

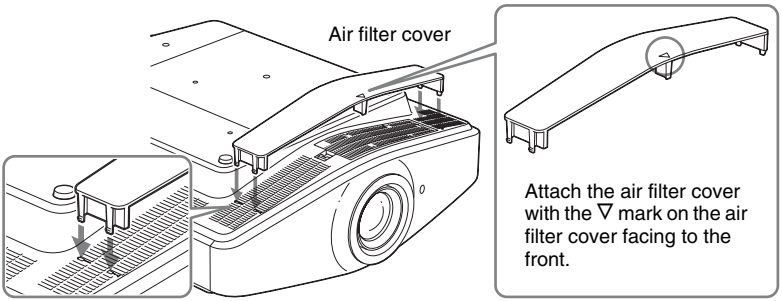

Note

When you use the projector placed on a floor, do not attach the air filter cover. If you attach it, the air filter cover may get broken.

When Using the PSS-H10 Projector Suspension Support

a: Distance between the screen and the installation hole at the ceiling side of the ceiling mount unit (front side)
x: Distance between the ceiling and the center of the screen such that the picture will not be truncated or blocked

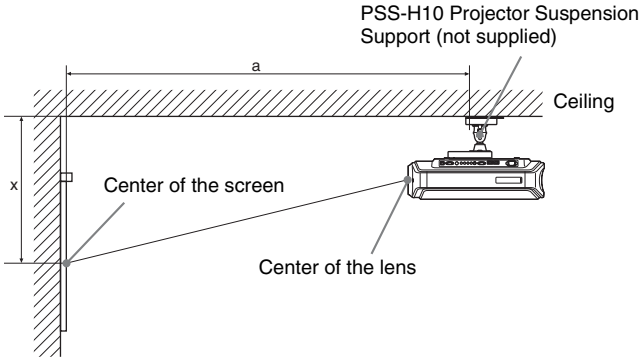

When using the 16:9 aspect ratio screen

Unit: mm (inches)

Screen Size (inches)		40	60	80	100	120	150	180	200	250	300
(mm)		1016	1524	2032	2540	3048	3810	4572	5080	6350	7620
a	Minimum Distance	1475 (58 1/8)	2105 (83)	2735 (107 3/4)	3365 (132 1/2)	3995 (157 3/8)	4940 (196 1/8)	5885 (231 3/8)	6515 (256 5/8)	8090 (318 5/8)	9665 (380 5/8)
	Maximum Distance	2368 (93 1/4)	3444 (135 5/8)	4520 (178)	5596 (220 3/8)	6672 (262 3/4)	8286 (326 3/8)	9900 (389 7/8)	10976 (432 1/4)	13666 (538 1/8)	16356 (644 1/8)
x	Minimum Distance	249 (9 7/8)	374 (14 3/4)	498 (19 5/8)	623 (24 5/8)	747 (29 5/8)	934 (36 7/8)	1121 (44 1/4)	1245 (49 1/8)	1557 (61 3/8)	1868 (73 5/8)
	Maximum Distance	590 (23 1/4)	751 (29 5/8)	913 (36)	1075 (42 3/8)	1237 (48 3/4)	1479 (58 1/4)	1722 (67 7/8)	1884 (74 1/4)	2288 (90 1/8)	2692 (106)

To calculate the installation measurements (SS: Screen Size)
a (minimum) = 31.5 (1 1/4) × SS + 214.8 (8 1/2)
a (maximum) = 53.8 (2 1/8) × SS + 216.1 (8 5/8)
x (minimum) = 6.2263 (1/4) × SS
x (maximum) = 8.0876 (11/32) × SS + 266 (10 1/2)

When using the 4:3 aspect ratio screen

Unit: mm (inches)

Screen Size (inches)		40	60	80	100	120	150	180	200	250	300
(mm)		1016	1524	2032	2540	3048	3810	4572	5080	6350	7620
a	Minimum Distance	1757 (69 1/4)	2528 (99 5/8)	3299 (130)	4070 (160 3/8)	4841 (190 5/8)	5997 (236 1/4)	7154 (281 3/4)	7925 (312 1/8)	9853 (388)	11780 (463 7/8)
	Maximum Distance	2850 (112 1/4)	4167 (164 1/8)	5483 (216)	6800 (267 3/4)	8117 (319 5/8)	10092 (397 3/8)	12068 (475 1/4)	13385 (527 1/8)	16677 (656 3/4)	19969 (786 3/8)
x	Minimum Distance	305 (12 1/8)	457 (18)	610 (24 1/8)	762 (30)	914 (36)	1143 (45)	1372 (54 1/8)	1524 (60)	1905 (75 1/8)	2286 (90 1/8)
	Maximum Distance	662 (26 1/8)	860 (33 7/8)	1058 (41 3/4)	1256 (49 1/2)	1454 (57 1/4)	1751 (69)	2048 (80 1/16)	2246 (88 1/2)	2740 (108)	3235 (127 1/2)

To calculate the installation measurements (SS: Screen Size)
a (minimum) = 38.551 (1 9/16) × SS + 214.8 (8 1/2)
a (maximum) = 65.842 (2 5/8) × SS + 216.1 (8 5/8)
x (minimum) = 7.62 (5/16) × SS
x (maximum) = 9.8979 (13/32) × SS + 266 (10 1/2)

Attaching the PSS-H10 projector suspension support

For details on installation on a ceiling, refer to the Installation manual for Dealers of the PSS-H10. Make sure to consult with a qualified Sony personnel for installation.
The installation measurements are shown below when installing the projector on a ceiling using the PSS-H10.

Top view

Install the projector so that the center of the lens is parallel to the center of the screen.

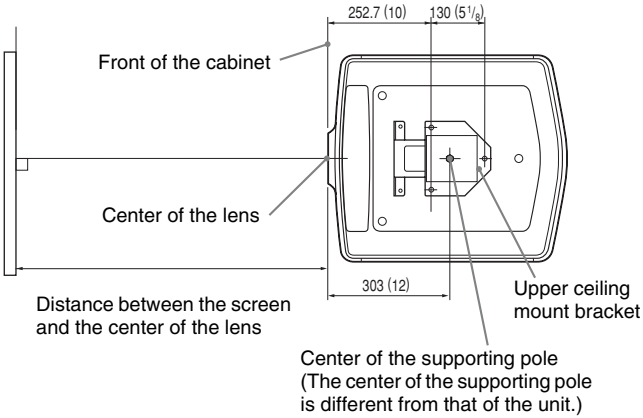

Front view

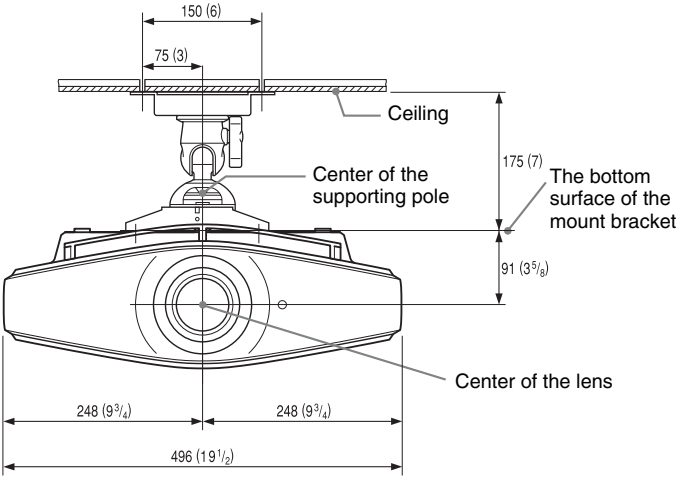

Side view

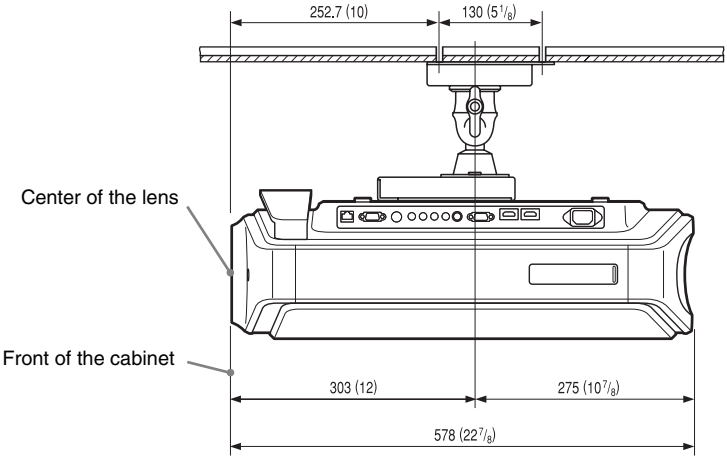

Making Fine Adjustments to the Horizontal Picture Position

Tools you need to get started
Phillips screwdriver: 110 mm (4 3/8 inches) or longer
Flat-head screwdriver: 110 mm (4 3/8 inches) or longer

Note

For details on how to make fine adjustments of the horizontal picture position, consult with qualified personnel. When the lens is scratched, there is a charge for repair.
Also, do not look into the lens while you are adjusting the picture position.

You can adjust the lens position right or left by about 1 mm from the center of the lens.

1 Remove the ring (washer) attached around the lens by turning it counterclockwise.

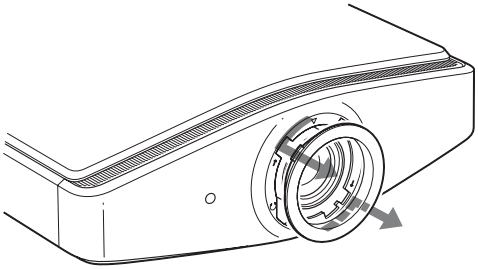

2 Loosen the four screws located at the position indicated with an arrow by turning them counterclockwise 2 turns each with a Phillips screwdriver.

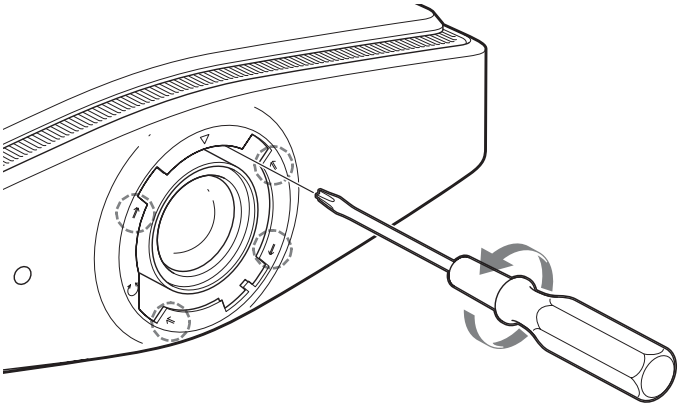

Note

Be sure not to loosen the screws too much, or the screws may fall out.

3 Insert a flat-blade screwdriver into the lens adjustment groove located at the left bottom (when the projector projects the image when placed on the floor, on a desk, etc.), and turn it in the direction in which you want to move the lens.

If you turn it to the left, the lens moves to the left, and if you turn it to the right, the lens moves to the right. (The range of movement is approximately ± 1mm.)

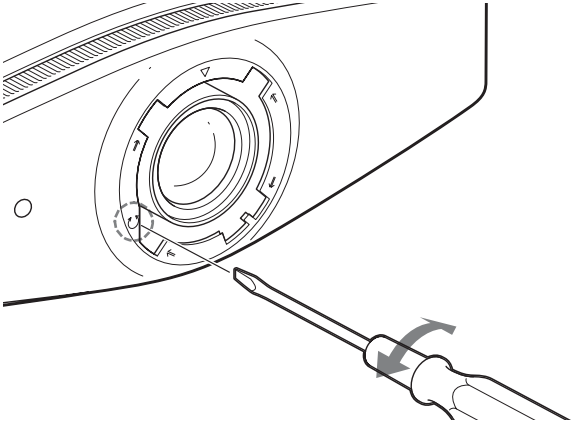

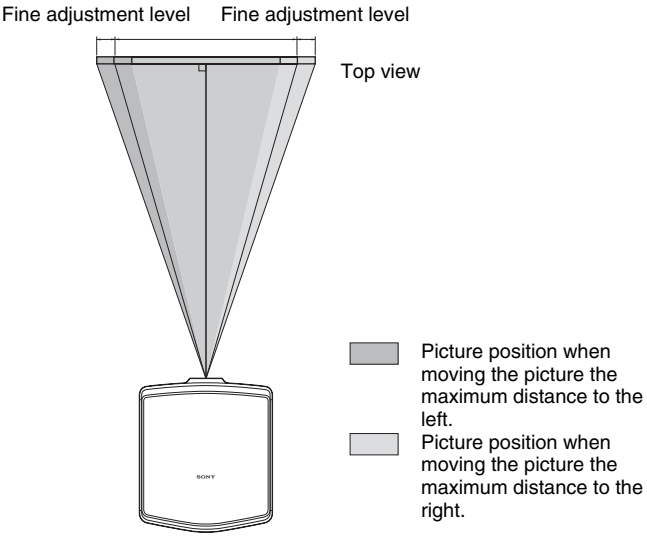

When using the 16:9 screen Unit: mm (inches)

Image projection size (inch)	**40**	**60**	**80**	**100**	**120**	**150**	**180**	**200**
(mm)	**1016**	**1524**	**2032**	**2540**	**3048**	**3810**	**4572**	**5080**
Fine adjustment level	60 (2 3/8)	90 (3 5/8)	120 (4 3/4)	150 (6)	180 (7 1/8)	225 (8 7/8)	270 (10 3/4)	300 (11 7/8)

4 **After you have decided the lens position, insert the Philips screwdriver at the locations of the four screws around the border of the lens in turn and tighten them to fix the lens in place.**

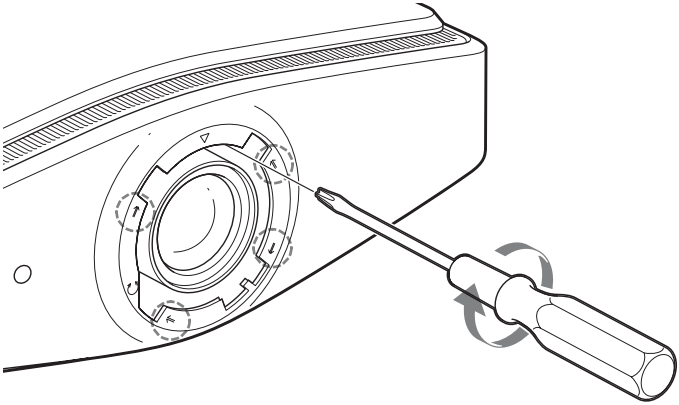

5 **Attach the ring (washer) aligning the ▽ mark on the inside of the ring with the ▽ mark on the projector by turning it clockwise.**

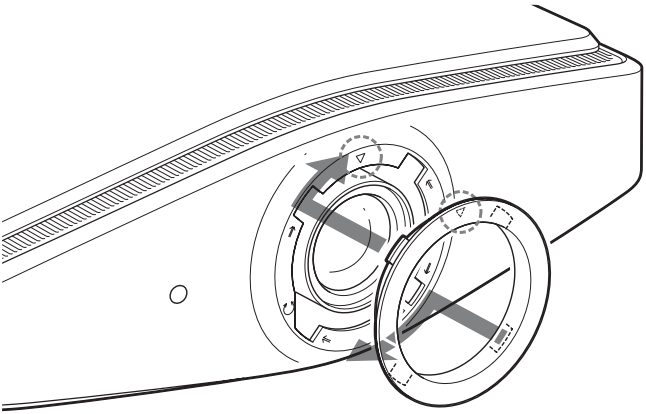

Note

When you use the horizontal and vertical lens shift features at the same time and adjust the horizontal lens shift to the maximum, you can move the picture upward from the center of the lens by a maximum of 53% of the screen size.

Index

A

Adjust Signal
- Phase 47
- Pitch 47
- Shift 47

Adjuster 25
Adjusting
- picture position 22
- picture quality 33

Advanced Iris 33, 41
Auto Input Search 50

B

Background 51
Black Level Adj. 33, 43
Blanking 53
Brightness 42

C

Ceiling Installation 78
Cinema Black Pro 41
Color Space 33, 45
Color System 49
Color Temp. 33, 42
Connecting
- Computer 21
- Video equipment 18

Contrast 42
Cooling Setting 48

E

Expert Setting 43

F

fH 55
fV 55

G

Gamma Correction 33, 44

H

HDMI 19
HDMI Control 50
Hue 42

I

Image Flip 52
ImageDirector3 ..... 36, 44
Input-A Signal Sel. 49

L

Lamp Timer 55
Language 48
Location of Controls
- Front/Right side 8
- Rear/Bottom 9

M

Menu
- Advanced Picture 45
- Function 50
- Information 55
- Installation 52
- Picture 41
- Screen 46
- Setup 48

Messages
- Caution 64
- Warning 63

N

NR 43

O

Over Scan 46

P

Panel Alignment 53
Picture Mode
- CINEMA 32
- Cinema 41
- DYNAMIC 32
- Dynamic 41
- STANDARD 32
- Standard 41
- USER 32
- User 41

Precautions 7
Preset Memory 55
Preset Signals 73

R

RCP 45
Remote control
  inserting the batteries 11
  location of controls 10
Reset
  resettable items 40
  resetting the items 40

S

Screen Area 47
Selecting the menu language 26
Sharpness 42
Specifications 71
Standby Mode 48
Status 48
Supplied accessories 11

T

Troubleshooting 60

V

V Keystone 52

W

WIDE MODE 30
Wide Mode
  Anamorphic Zoom 46
  Full 46
  Full1 46
  Full2 46
  Normal 46
  Wide Zoom 46
  Zoom 46

3275583120

http://www.sony.net/

Printed on 70% or more recycled paper.

Sony Corporation Printed in Japan